Barbecues

MASPORT 4/6 BURNER 210 SERIES

OWNER'S MANUAL

Please read these instructions carefully before assembly, to reduce risk of fire, burn hazard or other injury.

Keep these instructions in a safe place for future use.

This manual covers a range of barbecues which include: Graphite, Elite, Elite Plus, Mighty, Equip, Supreme, Supreme Plus, Deluxe, Deluxe Plus, Grande, Super Grande and Rear Burner Models.

CONTENTS

INTRODUCTION 3

SAFETY INFORMATION 3

SYMBOLS IN THIS OWNER'S MANUAL 3

IMPORTANT SAFETY INFORAMTION 3

WARRANTY INFORMATION 4

DISPOSAL OF PACKAGING 5

IMAGES 5

ASSEMBLY INSTRUCTIONS FOR BBQ WITHOUT CONDIMENT DRAWER 6

ASSEMBLY INSTRUCTIONS FOR BBQ WITH CONDIMENTS DRAWER & OTHER FEATURES 13

INSERTING/CHANGING THE BATTERY 22

FAT AWAY DISCHARGE FUNCTION - GRILL AND PLATE ORIENTATION 23

FOR MODELS WITH ROTISSERIE - ASSEMBLY INSTRUCTIONS 24

NATURAL GAS CONVERSION 25

LEAK TESTING 25

INSTALLATION 25

OPERATION 26

TROUBLESHOOTING 30

PARTS LIST 31

FASTENER KITS 34

OPTIONAL EXTRAS 35

CARE AND MAINTENANCE 36

TECHNICAL DATA 39

INTRODUCTION

This product has many features for making its use more pleasant and enjoyable. Safety, performance, and dependability have been given top priority in the design of this product making it easy to maintain and operate.

This product is only intended for use outdoors. It is intended for blowing light debris including leaves, grass and other garden refuse. It is intended to vacuum and mulch light debris as above and collect in the debris bag. It is not designed to suck or vacuum water or other liquid.

SAFETY INFORMATION

Keep the instructions in a safe place for future use.

WARNING!
DO NOT OPERATE THIS BBQ BEFORE IT HAS BEEN ASSEMBLED CORRECTLY AND YOU HAVE READ AND UNDERSTOOD THESE INSTRUCTIONS.

READ
These instructions are intended as a general guide and do not supersede national or local codes in any way. Contact local authorities for clarity of laws relating to the operation of this appliance.

SYMBOLS IN THIS OWNER'S MANUAL

Possible hazard or hazardous situation.
Not observing this instruction can lead to injuries or cause damage to property.

Important information on proper handling.
Not observing this instruction can lead to faults in the BBQ.

User information. This information helps you to use all the functions correctly.

Failure to follow these instructions could result in fire or explosion which could cause property damage, personal injury or death.

Accessible parts may be very hot. Keep young children away from the hot appliance at all times (even while cooling down).

Some parts of this grill may have sharp edges especially as mentioned in this manual! Wear suitable protective gloves if necessary.

Assembled parts sealed by the manufacturer must not be altered by the user. Any modification of the appliance by unauthorised persons may be dangerous.

WARNING!
FOR OUTDOOR USE ONLY

WARNING!
To reduce the risk of fire, burn hazard or other injury, read the instructions carefully and be sure your appliance is properly installed and assembled.

DANGER!
If you smell gas:
1. Shut off gas to the appliance;
2. Extinguish any open flame:
3. Open lid;
4. If odor continues, keep away from the appliance and immediately call your gas supplier or your fire department.

WARNING!
TO INSTALLER:
Test operation of the appliance and instruct the user before leaving. Ensure the appliance is commissioned correctly before handing over to the user.

WARNING!
The grill head is heavy and will require two or more people to lift and position onto the grill cart when assembly.

WARNING!
Do not try lighting this appliance without first reading the "LIGHTING INSTRUCTION" section of this manual.

WARNING!
Conversion to natural gas only done by authorized persons.

WARNING!
Always keep the electrical components in dry situation.

IMPORTANT SAFETY INFORAMTION

Please read and understand this manual fully before assembly and use.

- The Manufacturer's Warranty may be voided by the incorrect use of this product.
- The Manufacturer or their Agents can accept no liability for the unsuitability of, or any damage to, food that is cooked on this appliance.
- Use the correctly specified fuel with this barbecue. Check with your dealer for the specific fuel for which this barbecue has been designed.

OWNER'S MANUAL

- The operator must understand all the safety requirements detailed in this manual before using the barbecue.
- If you have any queries regarding these instructions, contact your local dealer for clarification before you use your barbecue.
- The unit must be correctly assembled before use. Failure to follow the manual's instructions could result in serious damage or injury.

PERSONAL SAFETY

- The use of alcohol, prescription or non-prescription drugs may impair the consumer's ability to properly assemble or safely operate this barbecue.
- The barbecue should be carefully checked for operational use every time before use.

- Never try to move the barbecue when it is on, or before it has had time to cool down.
- The person operating this barbecue should pay constant attention to the food being cooked.
- Do not leave the barbecue unattended when it is alight. The person should remain at the barbecue at all times when it is alight/cooking.

THIRD PARTY SAFETY
- The operator is responsible for the safety of all third parties while the barbecue is in use.
- Onlookers should be kept a safe distance away from the barbecue when it is in use.
- Keep children and animals well away while the barbecue is in use and while it is cooling down.

LOCATION
- Do not use indoors. Barbecue units are designed for OUTDOOR USE ONLY.
- Use in a weather-protected area, preferably under shelter.
- Ensure that the barbecue is on an even and secure surface before operating. Use the castor locks if fitted to lock the wheels in place.
- Do not use within one metre of any flammable surface of structure.

BURN AWARENESS
- Parts of the barbecue do get extremely hot and could cause serious burns – touch test the surface before applying a firm grip.
- The hood handle can become hot! Always wear cooking gloves and long sleeves when handling hot components.
- If cooking with the hood closed, be very careful opening the hood, a sudden rush of hot air could burn an unprotected arm.

GAS AWARENESS
- Ensure all gas couplings and hoses are in good condition and have been correctly fitted.
- Leak test all gas lines and connections before use.
- Do not store flammable materials near this barbecue.
- Do not store spare LPG cylinders under or near this barbecue.
- Do not place or use aerosols near this barbecue.
- Do not store or use gasoline or other flammable vapours or liquids in the vicinity of this barbecue.
- Ensure that the gas is turned OFF at the cylinder after use and while the barbecue is unattended.
- When turning off the barbecue, shut off the gas at the supply source before turning off all the burner controls.
- Do not lean over appliance when lighting.
- Do not use appliance with any cover on.
- Do not use plastic or glass utensils on the appliance.
- Do not dismantle control valves.
- Do not test for gas leaks with a naked flame.
- Do not modify the constructions of the appliance or the size of any burner, injector orifice or any other components
- Do not obstruct any ventilation of the appliance.
- Do not allow the flexible gas supply hose or any electrical cord to come in contact with any heated surface of the appliance.
- Do not use charcoal or any other solid fuel in this appliance.
- Do not disconnect any gas fittings while the appliance is in use.
- Do not use a rusty or dented gas cylinder with a damaged gas valve.
- Do not fill the gas cylinder beyond 80% capacity.
- Do not store gas cylinders below ground level. ULPG is heavier than air. Should a leak occur, the gas will collect and could ignite due to presence of a flame or electric spark.
- Do not place articles on or against this appliance.

ELECTRICAL AWARENESS
- ⧈ Symbol IEC 60417 - 5172 (2003-2) Class II equipment.
- This appliance is not intended for use by persons (including children) with reduced physical, sensory or mental capabilities, or lack of experience and knowledge, unless they have been given supervision or instruction concerning use of the appliance by a person responsible for their safety.
- Children should be supervised to ensure they do not play with the appliance.
- If the supply cord is damaged, it must be replaced by the manufacturer, its service agent or similarily qualified persons in order to avoid a hazard.
- BBQs with Grill Lights & USB parts run on AC power. It is IMPORTANT to ensure the care is taken to the location of the BBQ. See section in this manual which refers to “Location”.
- Turn power OFF when not in use.
- Avoid using in wet conditions.
- If an external lead is being used, ensure that it is corectly rated and meets current safety certification requirements.
- Ensure the power is turned OFF before connecting and disconnecting any components on the BBQ.
- Ensure power leads are kept away from any hot parts of the BBQ.
- Do not place the power lead where hot oil or fat can drip onto the lead.

FOR YOUR SAFETY AND OTHERS
If you smell gas:
- Shut off the gas supply to the barbecue.
- Extinguish any open flame (candles, cigarettes, etc.)
- Clear the area to allow the unburned gas to dissipate.
- Be aware of the reason for the gas smell, address this before continuing. Should the gas odour come from the LPG cylinder, immediately contact the fire department from an elevated safe distance.
- Connecting the gas cylinder to the barbecue, refer to that section in the manual.
- Leak testing, refer to that section in the manual.

SAFETY EQUIPMENT
- When cooking with oil/grease, fire extinguishing materials should be readily accessible.
- In the event of an oil/grease fire do not attempt to extinguish with water or alcohol. Use type BC dry chemical fire extinguisher or smother the fire with dirt, sand or baking soda.

RAIN HAZARD
In the event of rain while cooking with oil/grease, turn off the gas supply and all burners, cover the barbecue as soon as possible. Move people/ animals away from around the barbecue. Do not attempt to move the barbecue until it has cooled and can safely be moved.

WARRANTY INFORMATION

WARRANTY
Refer to the warranty supplied with this BBQ. Should any part fail due to defective workmanship or faulty materials within the specified period from the date of purchase, Masport will replace or repair the defective part free of charge. Refer to the warranty for details. Do not use a BBQ that is unsafe.

LPG CYLINDER
The cylinder manufacturer/distributor is responsible for the safety and performance of the LPG cylinder. This is not included in the Masport BBQ warranty. Do not use a cylinder that is unsafe.

DISPOSAL OF PACKAGING

Remove all protective packaging including any protective film from stainless steel surfaces.

Make sure you properly dispose of, or recycle the packaging material where possible to comply with applicable waste disposal laws in your area.

IMAGES

NOTE:
The following pages contain assembly instructions for various model options. Please ensure you identify your BBQ model so that the correct instructions can be follwoed.

When assembling the cabinet, leave all of the screws loose until completey assembled, then tighten all screws.

ASSEMBLY INSTRUCTIONS FOR BBQ WITHOUT CONDIMENT DRAWER

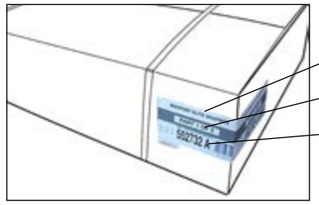

Product Description

Carton Identification

Product Part Number

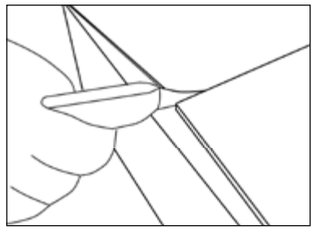

Open the carton by removing the shipping straps then slitting along both ends. Cut the tape only by a small amount in the middle, finish by lifting the carton flaps with your hand.

Unpack the entire carton, this carton will be used as a surface protector as the cabinet is being built. Open the carton as shown and place where the BBQ will be assembled

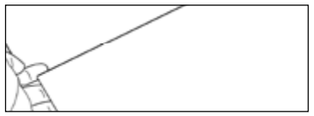

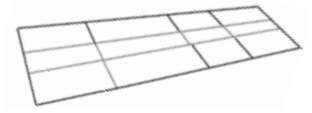

NOTE:
Letters in the bracket after every screw, helps you identify the item number from the parts list on page 6, from the fastener kit.

Tools needed for assembly: Crosshead screwdriver, 10mm A/F Spanner

Open the fastener kit, place to one side, 4 pcs screw (SS) M6x12 (item b) & 4pcs fibre washer (item c) for Hood Assembly.

Before commencing assembly, open the cartons and lay all of the components on the floor. Familarise them against the parts list on page 21, as some of these instructions refer to this parts list.

NOTE:
When assembling the barbecue, ensure it is sitting on a flat surface.

5. Assemble 1pc Front skirt (item 2) to the Base tray (item 1) using 2pcs Screw M6×12 (item a) from the fastener kit.

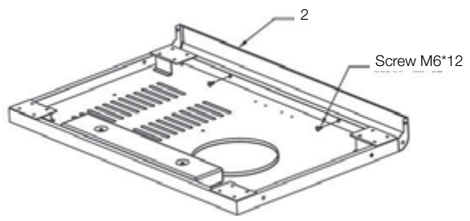

6. Assemble 1pc Left skirt (item 3) to the Base tray using 3pcs Screw M6×12 (item a) and 1pc Screw M5*10 (item d) from the fastener kit.

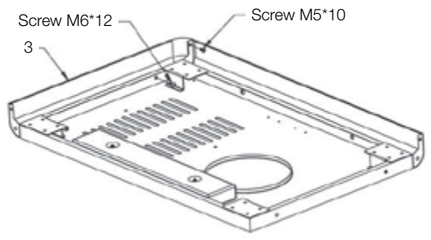

7. Assemble 1pc Right skirt (item 4) to the Base tray using 3pcs Screw M6×12 (item a) and 1pc Screw M5*10 (item d) from the fastener kit.

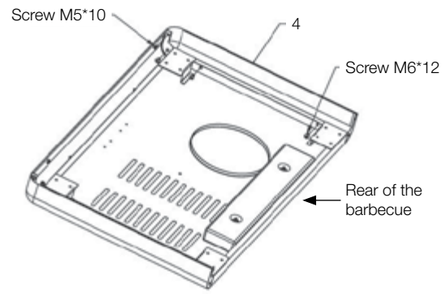

8. Assemble 4pcs Castors (item 5) to the Base tray using 16pcs Screw M6×12 (item a) from the fastener kit.

NOTE:
Assemble the casters and lock the rear castors before assembling the cabinet

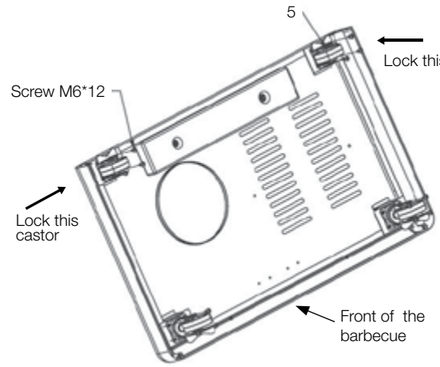

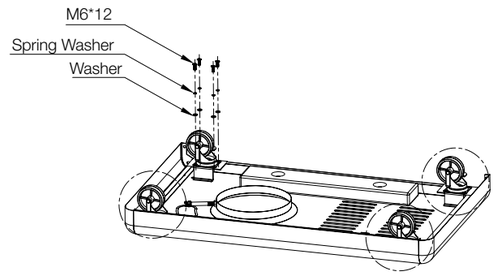

Locking the rear castors will steady the base. Position the base with the locks facing outwards.

NOTE:
Here on going forward keep the screws loose until the cabinet structure is complete. This will greatly assist with positioning the panels. Tighten all screws when cabinet is assembled.

9. Assemble the Left panel (item 6) and Right panel (item 7) to the Base tray using 4pcs Screw M6×12 (item a) from the fastener kit.

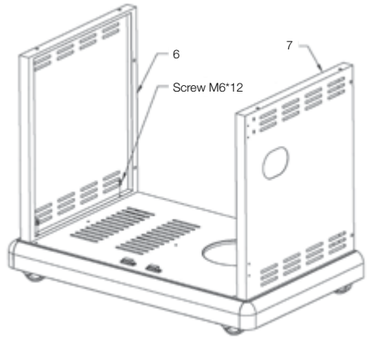

10. Assemble the Back panel (item 8) using 5pcs Screw M6×12 (item a) from the fastener kit.

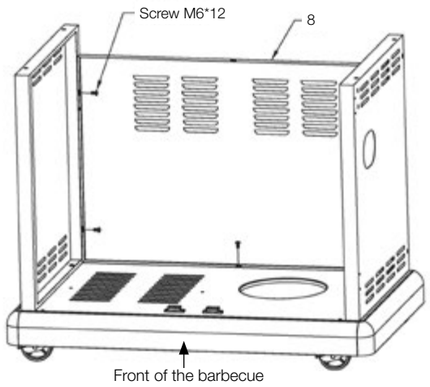

NOTE:
Assemble the side panels before assembling the top panel on the cabinet then assemble this sub-assembly on the barbecue

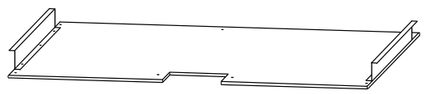

Step 1. Assemble the side panels (item 37) to the top cabinet panel (item 36) using 3 xM6 x12 screws (item a) each side.

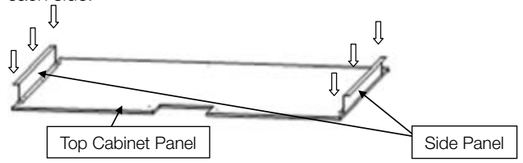

Step 2. Step 2 – Assemble this panel sub assembly to the rear panel of the cabinet using 3 xM6 x12 screws (item a).

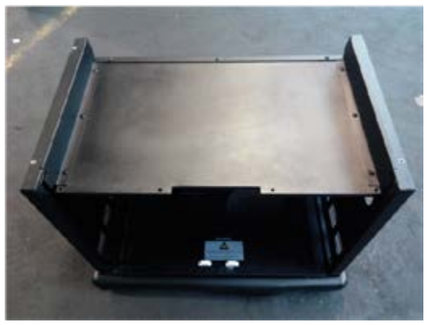

Step 3. Insert the top front panel with the side panel extension inside the panel as shown to provide the strength.

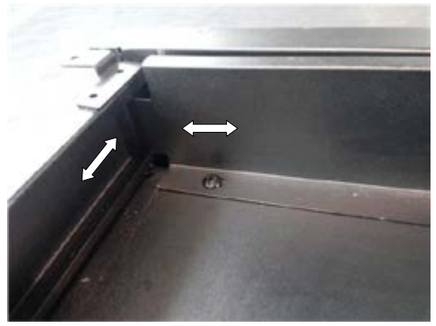

Step 4. Assemble the door panel to the side panels of the cabinet using 2 xM6 x12 (item a) screws each side. Keep the screws loose.

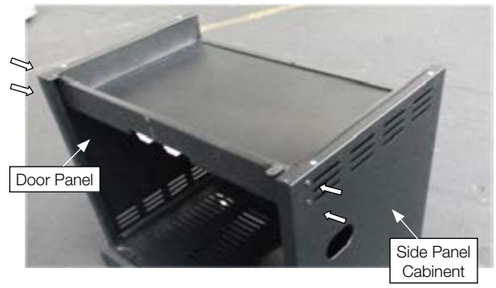

Step 5. Assemble the door panel and the top cabinet panel using 4 xM6 x12 screws (item a). Keep the screws loose.

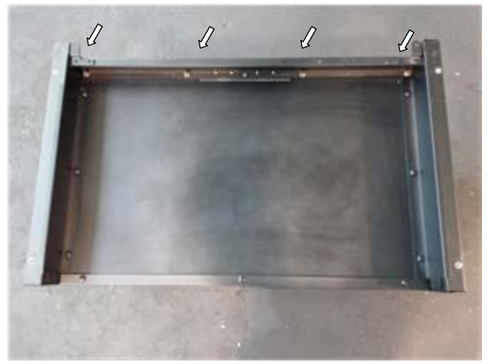

Step 6. Once all the parts mentioned above are assembled tighten all the screws.

9. Assemble Left door (item 10) and Right door (item 11) using 4pcs Screw M6×12 (item a), 4 Handle brackets (item 12) and 2 Handles (item 13), then assemble the door assemblies as the picture.

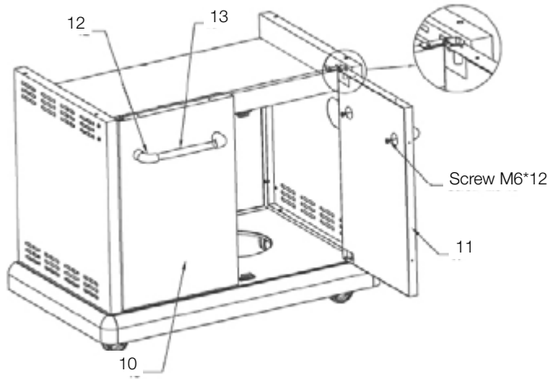

Note!
To keep screw slot against screwdriver pass screw through ribbon of plastic, hold both together, assemble screw to handle, remove plastic, and re-use for other three screws.

Note!
Once the cabinet has been fully assembled, and the doors open and close correctly with even clearances top and bottom, and side to side, the screws can now be fully tightened.

PREPARING THE HOOD / GRILL ASSEMBLY

Open the hood carton and remove the warming rack (item 23)

Lift up and out the polystyrene corner packing.

Remove the protective layer from the hood.

Cut open all sides with a knife taking care not to damage the hood or grill in the process.

- Open the carton walls outwards and flatten. Remove the polystyrene packing from beneath the grill.

Open the hood and remove in order:

- Packed cartons (some are empty and used as a gap filler) and any polystyrene packaging
- Grill first, then hotplate
- Remove the layer of cardboard
- Remove extra feature options if any. Some specific barbecue models include some extra feature items.
- At the rear you will locate the drip tray (item 18) remove this, (it is packed in the reverse). This may require the removal of the 2x step Screws (item e)
- The Hood / Grill is now ready to be lifted onto the cabinet. This is a large and heavy assembly which requires two persons to lift it safely into position.

10. 1) Assemble the hood and grill assembly (item 14) to the cabinet trolley with 4pcs Screw (SS) M6*12 (item b) and 4pcs fibre washer (item c) from the fastener kit.
    2) In some barbecue models the knobs are not fitted to the grill then assemble 6 pcs knob (item 15) to the valve shaft on the body assembly, as per the illusration below.
    3) If the rear burner knob is not fitted to the grill assemble 1 x knob - Rear burner (item 34) to the Rear burner valve shaft.

When the Timer is OFF the rounded shaft contour faces the Top/ 12 o'clock position and the flat spring metal insert grips the round face of the shaft of valve.

When the Timer is OFF the flat on the shaft faces the Bottom / 6 o'clock position and the Flat on the knob insert should match this position.

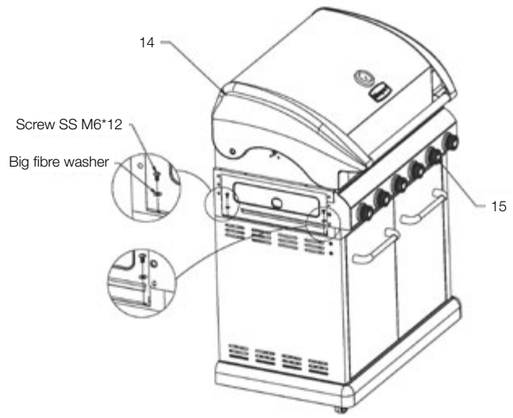

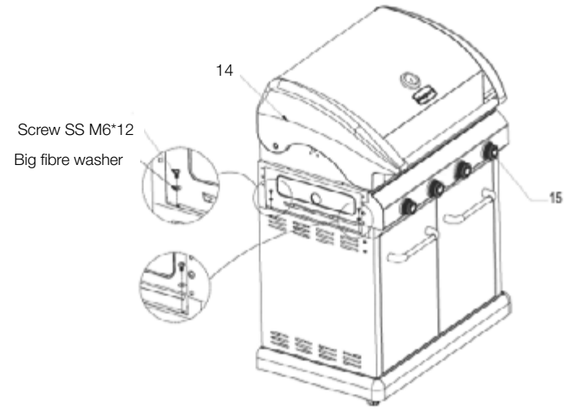

11. Loosen the 3 Screws (item b), remove the 4th & 5th screws, then assemble the heat shield (item 33) and left hand side shelf (item 16) to the appliance with 5pcs Screw (SS) M6*12 (item b). Level the top of the table and secure.
If the timer knob is not fitted then, fit one knob (item 15) on the shaft of the timer on the side table. Refer to the timer section for correct operating procedure.

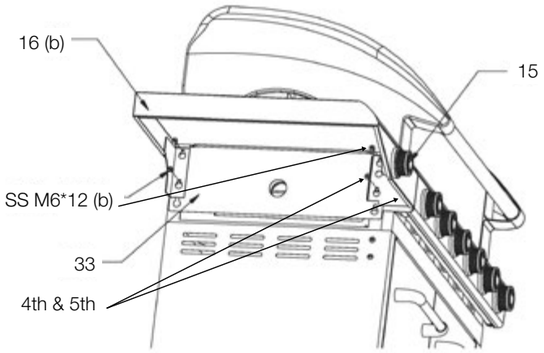

12. Loosen fully but do not remove 4 screws (item b) as shown. Remove two screws 5 & 6, lower the side table over the screw heads. Fasten the four screws to secure the side table. Refit screws 5 & 6, screw 6 secures the facia which may require frontal pressure to align this hole. Level the top of the table and secure.

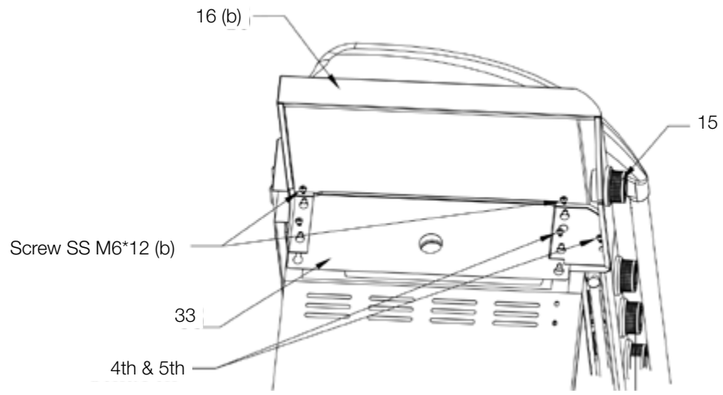

13. 1) Remove all packaging from the side burner prior to fitting the Right Hand (side Burner) table to the BBQ. Prepare the BBQ prior to fitting the side table, refer to previous instructions. Then assemble the Side burner assembly (item 17) as described in step 13. If the knob (item 15) has not been fitted then assemble the knob (item 15) to the valve shaft on side burner assembly (item 17), and make sure the red point on the knob is on the upper direction.
    2) Connect the side burner hose to the main manifold, and tighten carefully.

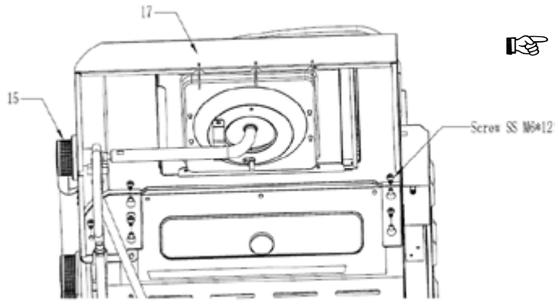

Note!
Before operating this appliance for the first time LEAK TEST ALL JOINTS.

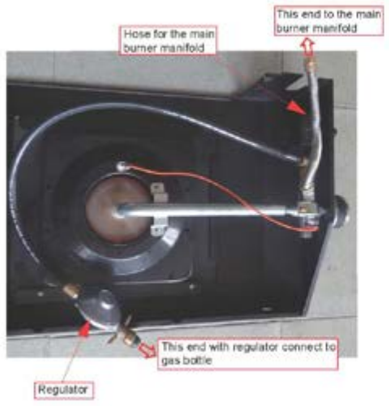

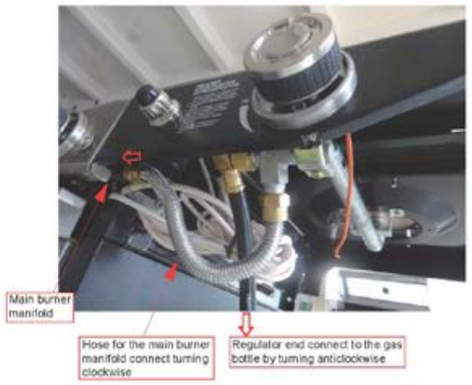

14. Put the Drip tray (item 18), Grease cup (item 19) into the grill body and 2pcs Step screw (item e) - (the step screws will be on the assembly already) to the rear of the grill body to secure the drip tray.

NOTE:

Some barbecue models require the stepped screws (item e) are removed to insert the drip tray. Once the tray is positioned correctly, refit step screw (item e).

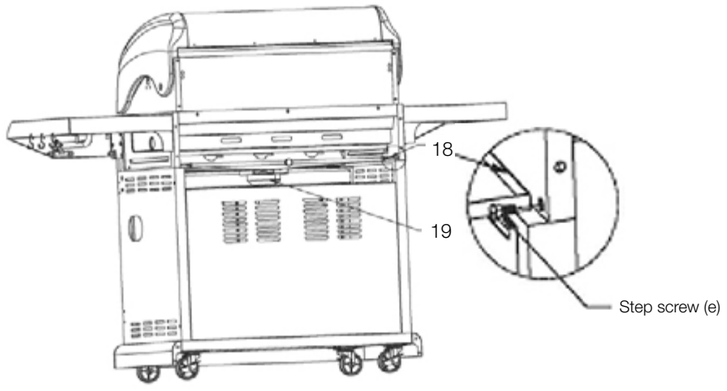

ASSEMBLY INSTRUCTIONS FOR BBQ WITH CONDIMENTS DRAWER & OTHER FEATURES

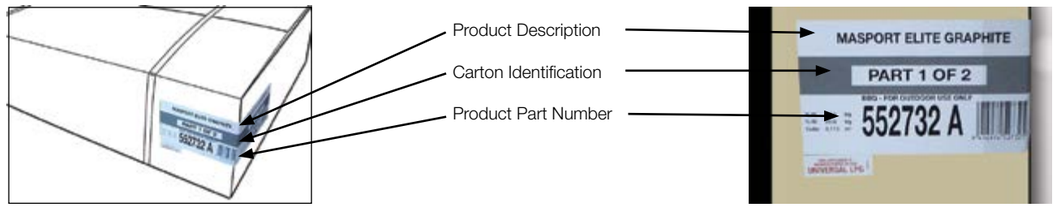

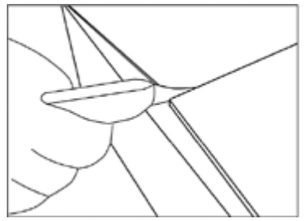

Open the carton by removing the shipping straps then slitting along both ends. Cut the tape only by a small amount in the middle, finish by lifting the carton flaps with your hand.

Unpack the entire carton, this carton will be used as a surface protector as the cabinet is being built. Open the carton as shown and place where the BBQ will be assembled

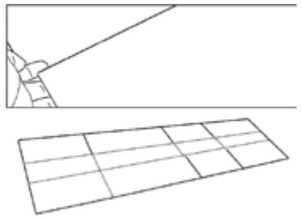

NOTE:

Letters in the bracket after every screw, helps you identify the item number from the parts list on page 6, from the fastener kit.

Tools needed for assembly: Crosshead screwdriver, 10mm A/F Spanner

Open the fastener kit, place to one side, 4 pcs screw (SS) M6x12 (item b) & 4pcs fibre washer (item c) for Hood Assembly.
Before commencing assembly, open the cartons and lay all of the components on the floor. Familarise them against the parts list on page 21, as some of these instructions refer to this parts list.

NOTE:

When assembling the barbecue, ensure it is sitting on a flat surface.

1. Assemble 1pc Front skirt (item 2) to the Base tray (item 1) using 2pcs Screw M6×12 (item a) from the fastener kit.

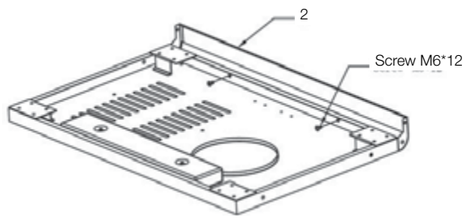

2. Assemble 1pc Left skirt (item 3) to the Base tray using 3pcs Screw M6×12 (item a) and 1pc Screw M5*10 (item d) from the fastener kit.

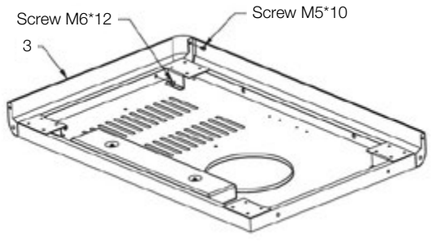

3. Assemble 1pc Right skirt (item 4) to the Base tray using 3pcs Screw M6×12 (item a) and 1pc Screw M5*10 (item d) from the fastener kit.

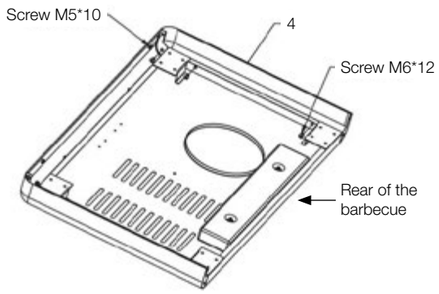

4. Assemble 4pcs Castors (item 5) to the Base tray using 16pcs Screw M6×12 (item a) from the fastener kit.

NOTE:
Assemble the casters and lock the rear castors before assembling the cabinet

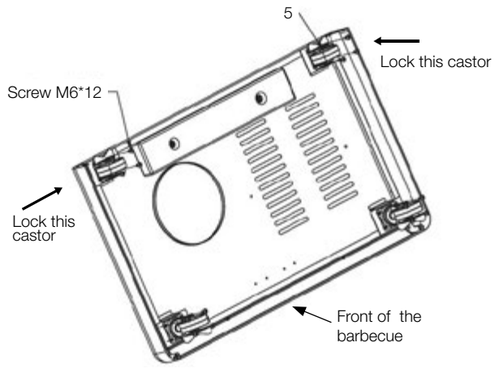

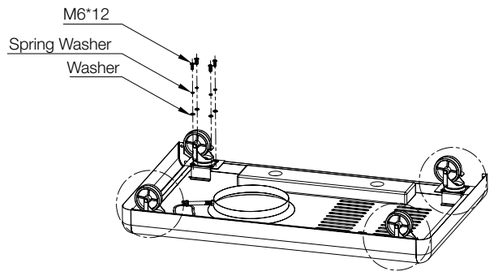

Locking the rear castors will steady the base. Position the base with the locks facing outwards.

NOTE:
Here on going forward keep the screws loose until the cabinet structure is complete. This will greatly assist with positioning the panels. Tighten all screws when cabinet is assembled.

5. Assemble the Left panel (item 6) and Right panel (item 7) to the Base tray using 4pcs Screw M6×12 (item a) from the fastener kit.

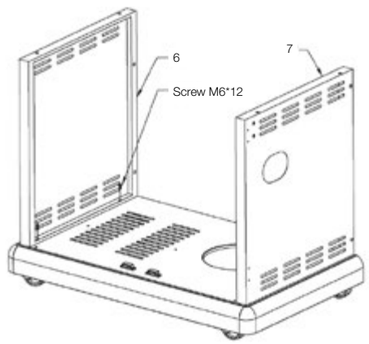

6. Assemble the Back panel (item 8) using 5pcs Screw M6 x 12 (item a) from the fastener kit.

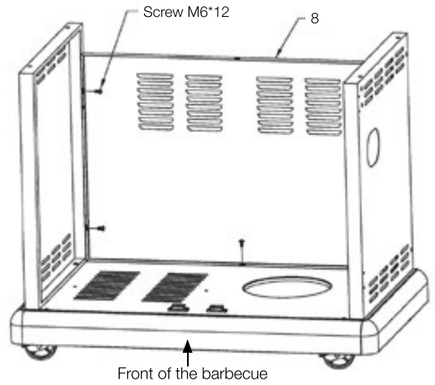

7. Assemble the side panels before assembling the top panel on the cabinet then assemble this sub-assembly on the barbecue.

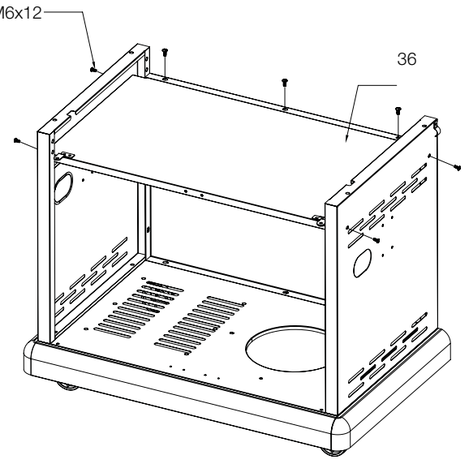

8. Assemble the side panels before assembling the top panel on the cabinet then assemble this sub-assembly on the barbecue.

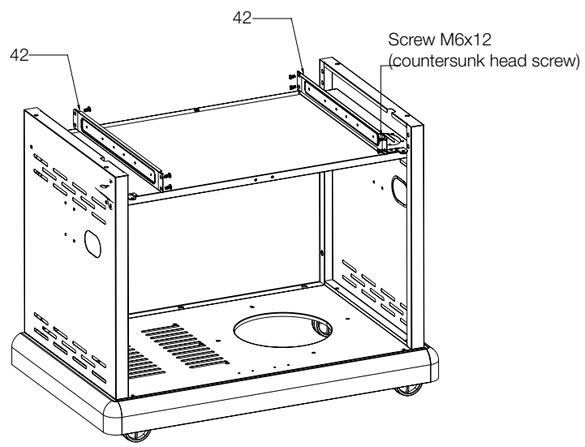

9. Assemble Left door (item 10) and Right door (item 11) using 4pcs Screw M6x12 (item a), 4 Handle brackets (item 12) and 2 Handles (item 13). then assembl;e the door assemblies as pictured.

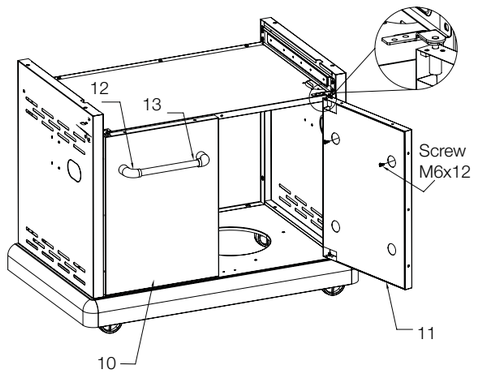

NOTE:
To keep screw slot against screwdriver pass screw through ribbon of plastic, hold both together, assemble screw to handle, remove plastic and re-use for the other three screws.

NOTE:
Once the cabinet has been fully assembled, and the doors open and close correctly with even clearances (top and bottom and side-to-side), the screws can now be fully tightened.

10. Assemble Left door (item 10) and Right door (item 11) using 4pcs Screw M6x12 (item a), 4 Handle brackets (item 12) and 2 Handles (item 13). then assembl;e the door assemblies as pictured.

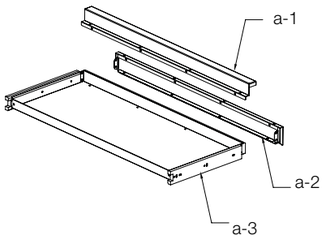

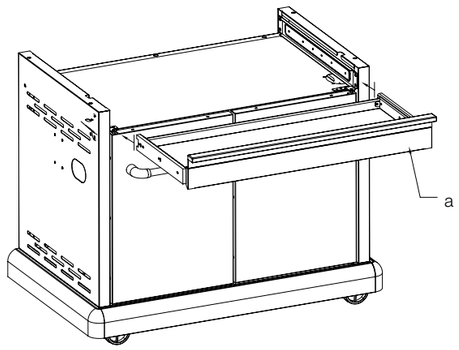

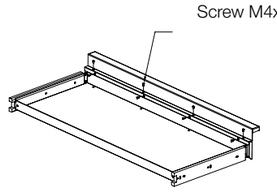

REPARING THE HOOD / GRILL ASSEMBLY

- Open the hood carton and remove the warming rack (item 23)
- Lift up and out the polystyrene corner packing.
- Remove the protective layer from the hood.
- Cut open all sides with a knife taking care not to damage the hood or grill in the process.
- Open the carton walls outwards and flatten. Remove the polystyrene packing from beneath the grill.

Open the hood and remove in order:

- Packed cartons (some are empty and used as a gap filler) and any polystyrene packaging
- Grill first, then hotplate
- Remove the layer of cardboard
- Remove extra feature options if any. Some specific barbecue models include some extra feature items.
- At the rear you will locate the drip tray (item 18) remove this, (it is packed in the reverse). This may require the removal of the 2x step Screws (item e)
- The Hood / Grill is now ready to be lifted onto the cabinet. This is a large and heavy assembly which requires two persons to lift it safely into position.

11. 1) In some barbecue models the knobs are not fitted to the grill then assemble 6 pcs knob (item 15) to the valve shaft on the body assembly, as per the illusration below.
    2) If the rear burner knob is not fitted to the grill assemble 1 x knob - Rear burner (item 34) to the Rear burner valve shaft.

When the Timer is OFF the rounded shaft contour faces the Top/ 12 o'clock position and the flat spring metal insert grips the round face of the shaft of valve.

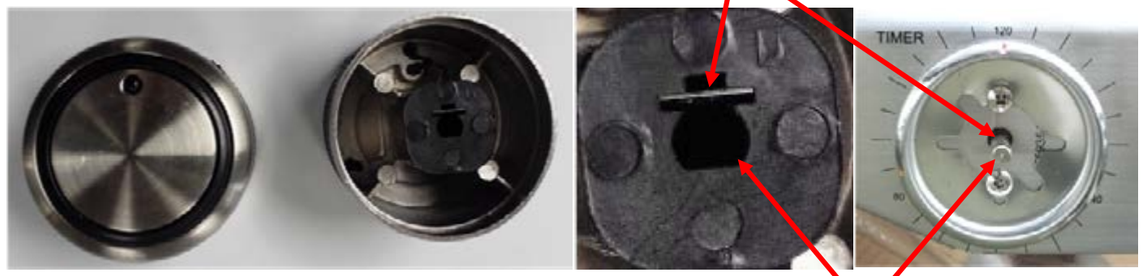

When the Timer is OFF the flat on the shaft faces the Bottom / 6 o'clock position and the Flat on the knob insert should match this position.

12. Assemble the grill body onto the trolley by using 4pcs Screw M4x12, and then assemble the bottle opener on the left side panel by using 2pcs M4x12.

13. Loosen the 3 Screws (item b), remove the 4th & 5th screws, then assemble the heat shield (item 33) and left hand side shelf (item 16) to the appliance with 5pcs Screw (SS) M6*12 (item b). Level the top of the table and secure.
If the timer knob is not fitted then, fit one knob (item 15) on the shaft of the timer on the side table. Refer to the timer section for correct operating procedure.

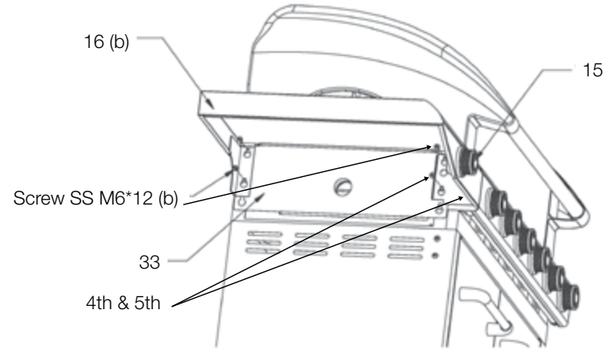

14. 1) Remove all packaging from the side burner prior to fitting the Right Hand (side Burner) table to the BBQ. Prepare the BBQ prior to fitting the side table, refer to previous instructions. Then assemble the Side burner assembly (item 17) as described in step 13. If the knob (item 15) has not been fitted then assemble the knob (item 15) to the valve shaft on side burner assembly (item 17), and make sure the red point on the knob is on the upper direction.
2) Connect the side burner hose to the main manifold, and tighten carefully.

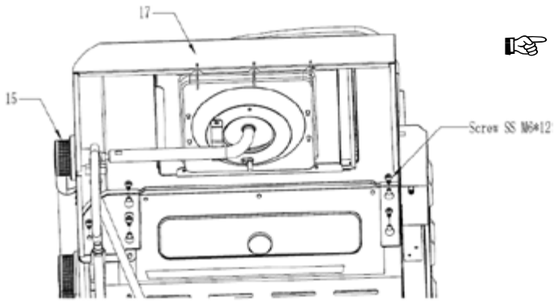

NOTE!
Before operating this appliance for the first time
LEAK TEST ALL JOINTS.

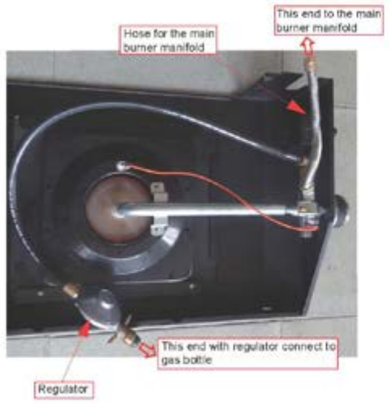

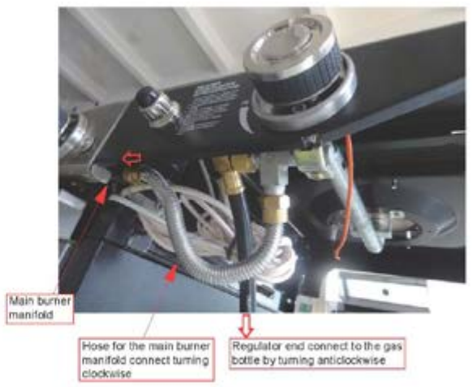

15. Put the Drip tray (item 18), Grease cup (item 19) into the grill body and 2pcs Step screw (item e) - (the step screws will be on the assembly already) to the rear of the grill body to secure the drip tray.

NOTE:
Some barbecue models require the stepped screws (item e) are removed to insert the drip tray. Once the tray is positioned correctly, refit step screw (item e).

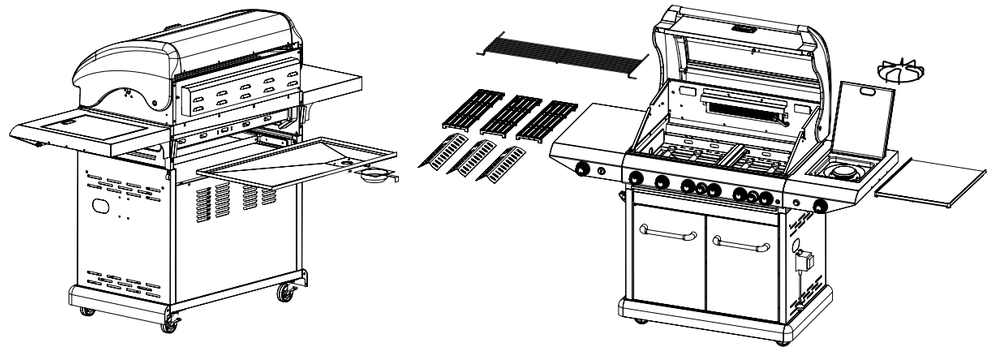

16. Insert the wiring plug of transformer into the bottom of the transformer connector. And then fasten the nut by turning clockwise. The lead from the Transformer to the lights is to be routed on the outside of the BBQ Cabinet. It is designed to be just long enough in length to do this (will be too short if routed on the inside of the Cabinet).

17. Insert the wiring plug of USB into the USB port (if included in your model of BBQ).

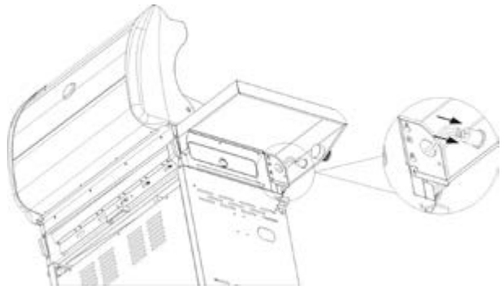

18. Connecting the ignition wire/ wires to the electronic module

NOTE:
1. The rear burner valves operate with the electronic ignition.
2. All the side burner valves operate with the integrated ignition.

Check the diagram of module to determine the BBQ ignition type
3. If the module has only one pin i.e. connecting single wire then Rear burner operates with electronic ignition
4. If the module has multiple pins for connecting the wires then Rear burner and Main burners operate with electronic ignition.

Single Pin Electronic module

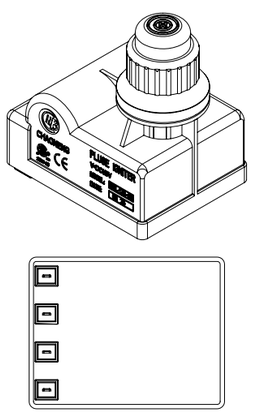

4 Pin Electronic module

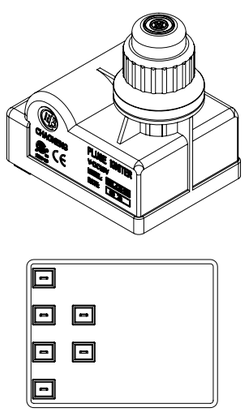

6 Pin Electronic module

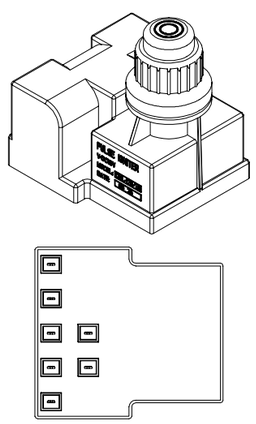

7 Pin Electronic module

Follow the diagram to connect the wires between the electronic module and the electrode.
Connect the lead wire with the electronic ignition as shown below. Make sure that the wire is clipped tight.

SINGLE PIN ELECTRONIC MODULE:

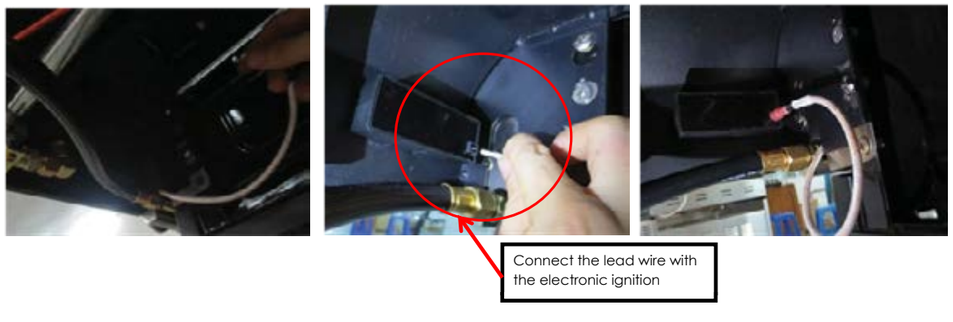

4 / 6 / 7 Pin Electronic Module:

1.

2.

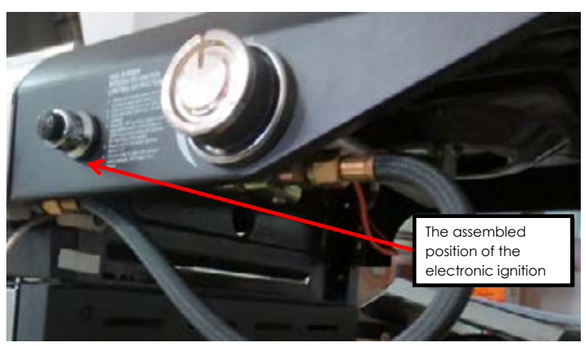

3. Connect the lead wire with the ignition as shown below, no sequence is required, make sure that the wire is securely clipped.

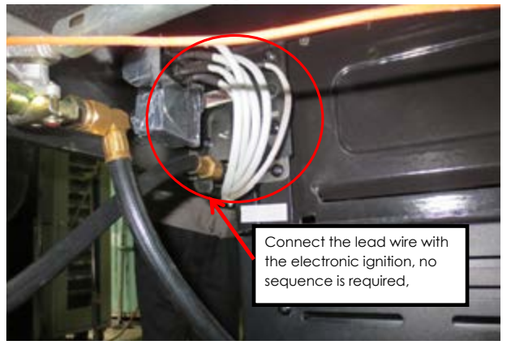

NOTE:

Make sure that the wires are securely positioned on each end and routed through the wire clips.

The BBQ body works as an earth for the electronic module. Make sure that the side table is assembled tightly and forms the complete circuit. If not, the ignition spark will not occur.

CAUTION: All wires must be properly routed through wire clips.

Verify the ignition system of your BBQ model before connecting the regulator to the gas cylinder
1. Integrated ignition valve - Push in then turn the knob anticlockwise to HI. Test each burner to hear a clicking sound with spark. It indicates the valve is fitted with integrated ignition.
2. Electronic ignition - Install the battery in the electronic module fitted on the RH side table. Make sure the battery is in good condition and the battery polarity is correct. Push the button to hear a continuous clicking sound with spark.

Listen & look for the sparks at all the burners' individually and make sure that all the valves are functioning smooth by turning them "ON" (by pushing the control knob in and turning anticlockwise) and "OFF" (by pushing the control knob in and turning clockwise).

INSERTING/CHANGING THE BATTERY

Unscrew the pulse cap assembly. Insert the battery as shown. Replace the pulse cap assembly. For single pin modules 1 X AAA battery is required for the replacement, and for 4 / 6 / 7 pin modules 1 X AA battery is required for the replacement.

20. Place the Flame tamer (20) to the positions as in the pictures.

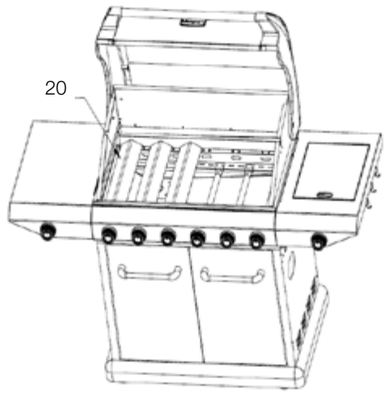

6 BURNER BBQS

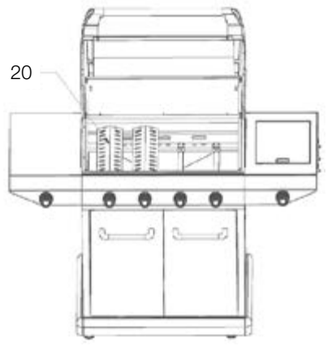

4 BURNER BBQS

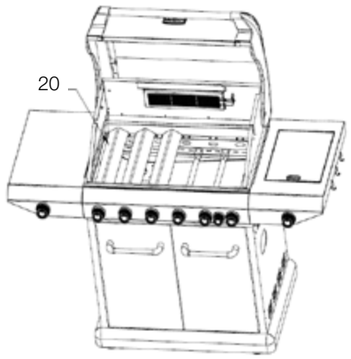

RB BURNER BBQS

21. Place the Cooking grill (21), Cooking plate (22), Deep dish (35 - only if applicable) and Warming rack (23) to the frame body as in the diagrams.

NOTE:

The cooking plate and deep dish must not be used at the same time. The barbecue is designed to operate safely with approx 34% of the cooking surface being on an open grill.

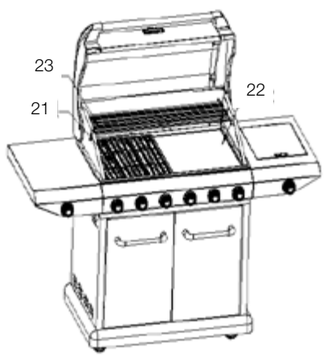

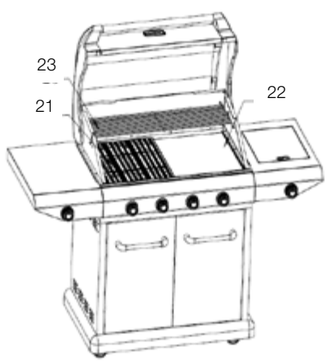

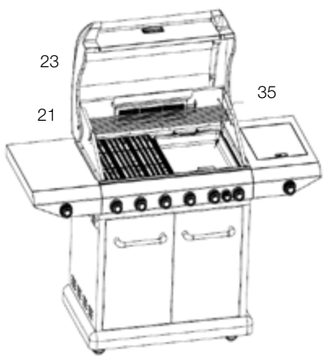

FAT AWAY DISCHARGE FUNCTION - GRILL AND PLATE ORIENTATION

For correct Fat Away Discharge function, install the grill and plate draining the excess fats & oil towards rge back of the BBQ as shown in the below photos.

This end sits on the Front end of the BBQ

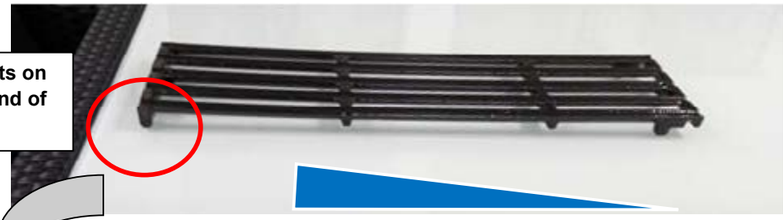

Oil Drain Direction

Front of the BBQ

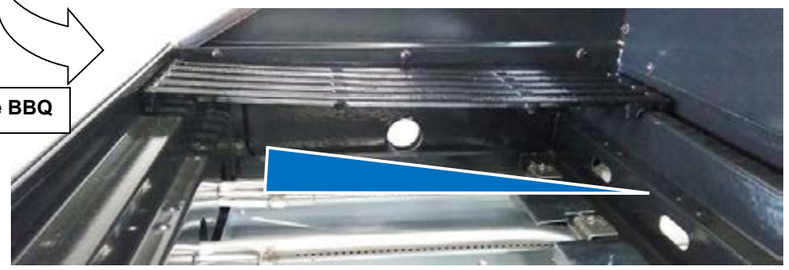

Back of the BBQ

This end sits on the Front end of the BBQ

Oil Drain Direction

Front of the BBQ

Back of the BBQ

FOR MODELS WITH ROTISSERIE - ASSEMBLY INSTRUCTIONS

Tools needed for assembly

Crosshead screwdriver, 10mm A/F spanner, 2x 8mm A/F Spanners.

22. Assemble the Prong (24), the Rod-A (25), the Rod-B (26) and the Guide (27), the Rotisserie handle (28) together as in the diagram.

NOTE:
Rotisserie Rod 26 is threaded LH, assemble by turning rod anti-clockwise. Tighten with 8mm A/F Spanners. This connection must remain spanner tight.

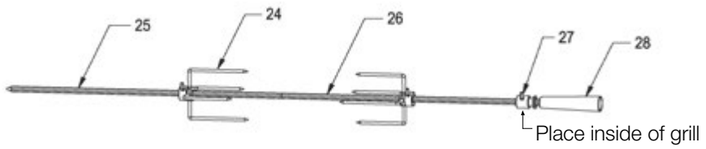

Assemble the Motor holder (29) to the appliance with 2pcs Screw M6*10 (a), 2 fibre washer (c) and 2pcs Nut M6 (f) as the diagram. Place the battery (31) into the Motor (30). Assemble the Motor and Rotisserie to the appliance as the picture.

NOTE:
Take note of the battery + - positions prior to fitting the batteries.

NOTE:
There is an option to use a mains adaptor (not stocked). Requires: Mains adaptor 240 volt > 3 volt DC 3 milliamps or greater.

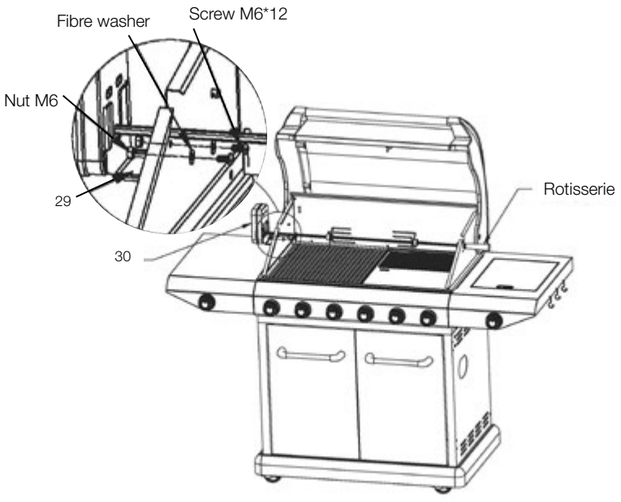

NOTE:
For 210 models without a Rotisserie, there is an option to purchase 559218 Rotisserie Set-210.

NATURAL GAS CONVERSION

The 210 Series of BBQ has the option of being converted to natural gas. This conversion must be actioned by a certified agent using a Masport NG conversion kit.

The certifying agent (usually a gas fitter or gas plumber) will update the information on the data plate to keep the barbecue compliant with local regulations.

LEAK TESTING

When to Test: The BBQ gas bottle, regulator & hose assembly should be checked for leaks, using the soapy water leak test, every time you reconnect your regulator to the BBQ gas bottle. You should also test after any long period of non-use, such as at the beginning of BBQ season.

What to use: You will need a soapy water solution to check for any leaks. Mixing liquid hand soap with water will work fine (do not use any other household cleaning products).

How to Test: Put some soapy water in a spray bottle or a dish. Turn on the gas bottle but do not turn on the BBQ. Next, spray the entire valve, regulator and hose assembly with the soapy water including where the hose connects to the BBQ. Alternatively, you can apply the soapy water with a paint brush, basting brush.

Bubbles will form if there is a gas leak and you may also smell the gas. If you find a leak, turn off the gas bottle immediately!

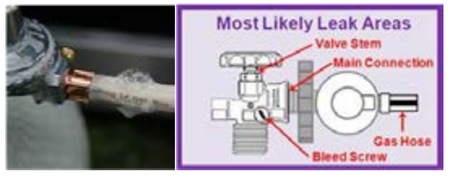

Do not turn back on or attempt to use the BBQ if a gas leak has been detected, contact your local BBQ Dealer for repair.

INSTALLATION

This barbecue is for outdoor use only and should be placed in a well-ventilated area. Take care to ensure that the minimum clearances guidelines are followed:

Minimum clearances:

From sides: 430mm; From back: 430mm

From above (vertical): 1000mm

Keep this barbecue away from any flammable materials! This appliance shall only be used in an above ground open-air situation with natural ventilation, without stagnant areas, where gas leakage and products of combustion are rapidly dispersed by wind and natural convection. This barbecue is not designed for marine use.

Any enclosure in which the appliance is used shall comply with one of the following:

1. An enclosure with walls on all sides, but at least one permanent opening at ground level and no overhead cover.
2. Within a partial enclosure that includes an overhead cover and no more than two walls.
3. Within a partial enclosure that includes an overhead cover and more than two walls, the following shall apply:
   a. at least 25% of the total wall area is completely open and unrestricted.
   b. at least 30% of the remaining wall area is open and unrestricted
4. In the case of balconies, at least 20% of the total of the side, back and front wall areas shall be and remain open and unrestricted.

See following diagrams for further illustration:

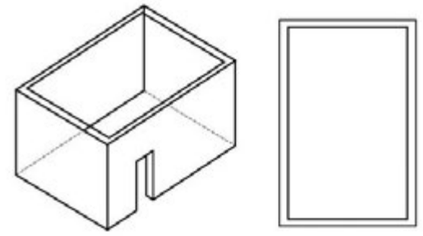

FIGURE F1-OUTDOOR AREA-EXAMPLE 1

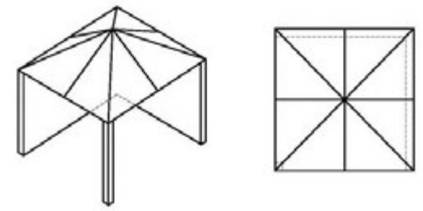

FIGURE F2-OUTDOOR AREA-EXAMPLE 2

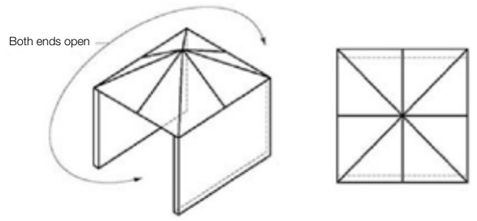

FIGURE F3-OUTDOOR AREA-EXAMPLE 3

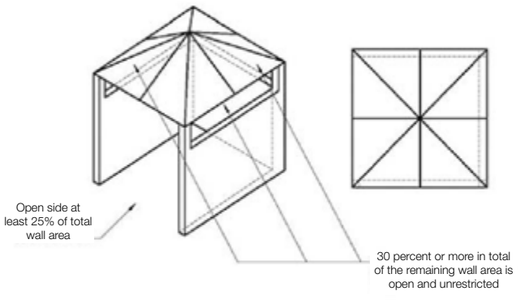

FIGURE F4-OUTDOOR AREA-EXAMPLE 4

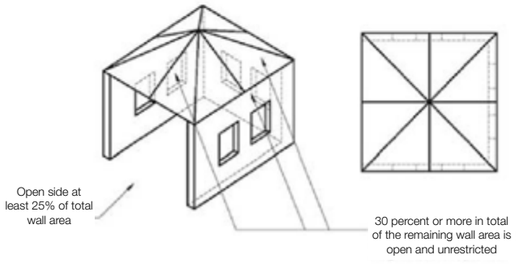

FIGURE F5-OUTDOOR AREA-EXAMPLE 5

OTHER PRECAUTIONS
Do not obstruct any of the ventilation openings in the barbecue body. Also, position the gas supply cylinder inside the cabinet, in the cylinder base positioning hole. Should you need to change the gas cylinder, confirm that the cylinder is off, and that there are no sources of ignition (cigarettes, open flame, sparks, etc.) near before proceeding. Be sure to inspect the gas hose and ensure it is free of any twisting or tension. The hose should hang freely with no bends, folds, or kinks, which could obstruct free flow of gas. Apart from the connection point, no part of the hose should touch any hot barbecue parts. Inspect the hose before use. If the hose is damaged, it must be replaced with a hose suitable for use with ULPG and meet the national standards for the country of use. The length shall not exceed 1.5m. Should minimum clearances not be adhered to severe flare up may be experienced due to lack of airflow around the barbecue, thus voiding manufacturer's warranty.

GAS AND REGULATOR INFORMATION
This barbecue is designed for LP gas use only. Bottle sizes of 4.5kg or greater are recommended for use with this barbecue. Suitable LPG regulators must have an outlet pressure of 2.75 kPa. You must have the proper regulator and bottle in order for the barbecue to operate safely and efficiently. Please consult your local gas dealer for the most suitable gas cylinders. Please note the regulator supplied with this barbecue is of an approved type. The manifold thread type is 5/8" x 18.

For more information on pipe sizing, please refer to AS/NZS 5601 /AG601 for details.

The gas cylinder must always be stored or used in an upright position.

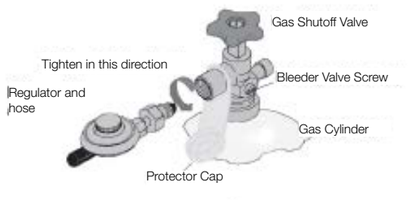

FIXING THE GAS REGULATOR TO THE CYLINDER
Confirm all barbecue control knobs are in the off position. Hand-tighten the regulator supplied with this barbecue to the gas cylinder by screwing in an anti-clockwise direction.

DO NOT OVERTIGHTEN!
As the regulator is fitted with a soft nose, it should only be tightened a further 1/4 turn after resistance is first felt.

OPERATION

Warning!
Before proceeding, be certain you understand the safety information contained in this manual.

This barbecue is not designed to be used with more than 66% of the cooking area as a solid plate. Full coverage of plates will cause excessive build-up of heat and damage the barbecue.

WARNING!

Before proceeding, be certain you understand the safety information contained in this manual.

This barbecue is not designed to be used with more than 66% of the cooking area as a solid plate. Full coverage of plates will cause excessive build-up of heat and damage the barbecue.

NOTE:
Before using the barbecue for the first time, the barbecue must be lit and burning for 30 minutes on the "low" setting.

IMPORTANT!

The The regulator supplied with this BBQ may incorporate an Excess Flow Control Safety Device. The Excess Flow Control will activate to prevent gas flow should a regulator malfunction occur. It is important that the BBQ operator understands that all gas valves on the BBQ are closed in the OFF position prior to opening the gas cylinder valve.

If the BBQ valves are open prior to opening the cylinder valve, the Excess Flow Control will be activated and prevent the BBQ from being lit. To reset, close the BBQ valves and gas cylinder valve, wait for 1 minute and use correct lighting procedure as detailed below.

MAIN BURNER AND SIDE BURNER LIGHTING (INTEGRATED IGNITION)
1. Open the lid before igniting the barbecue
2. Check all the knobs are in the "OFF" position
3. Open the gas control valve at the gas cylinder
4. The valves fitted to this BBQ include a safety feature. The valve must be depressed before turning. This feature prevents accidental activation of the knob
5. From the "OFF" position, push in then turn control knob anti-clockwise to the "HI" position until hear a "click" sound
6. Repeat step 4, 3-4 times until the burner is lit
7. If the burner fails to light, turn off and wait for 5 minutes, then begin from step 4
8. Once a burner is lit, similarly light the remaining burners.
9. Turn the knob anticlockwise to adjust the heat from High – medium – Low to your heat requirement.

MAIN BURNER LIGHTING (ELECTRONIC IGNITION)
1. Open the lid before igniting the barbecue
2. Check all the knobs are in the "OFF" position
3. Open the gas control valve at the gas cylinder
4. Operate each valve in combination with the electronic ignition push button on the side burner table
5. From the "OFF" position, push in then turn control knob anti-clockwise to the "HI" position
6. Keep the knob pushed-in at the "HI" position for 4 seconds whilst pressing the electronic ignition push button
7. Repeat step 4, 3-4 times until the burner is lit
8. If the burner fails to light, turn off and wait for 5 minutes, then begin from step 4
9. Turn the knob anticlockwise to adjust the heat from High – medium – Low to your heat requirement.

FOR MANUAL IGNITION (MAIN BURNER)
1. Light a 90mm barbecue match and hold adjacent to the lighter hole at the right end of the barbecue. (Fig.1)
2. Turn the right hand gas control knob to the high position. The burner will light from the match.
3. Once the right burner is lit, the burner next to it can be turned on and will light off the lit burner. Repeat until all burners are alight.
4. Each burner can be adjusted. Turn the knob anticlockwise to adjust the heat from High - medium - Low to your heat requirement.

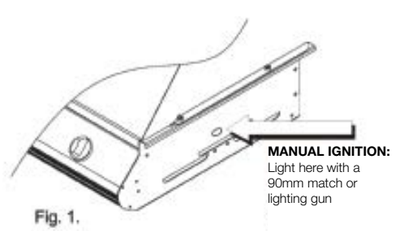

Fig. 1.

FOR MANUAL LIGHTING (SIDE BURNER)
1. Turn all knobs to "OFF" then open the LP tank valve. Always keep your face and body as far from the grill as possible when lighting.
2. Raise side burner lid.
3. Push in and then turn control knob anticlockwise to high position.
4. Place a lit match near the burner until the burner ignites.
5. If burner fails to light, turn off and wait 5 minutes, then try
6. again. If burner still does not light after repeated attempts, call
7. your local dealer for assistance.

REAR BURNER LIGHTING (ELECTRONIC IGNITION)
1. Open the lid before igniting the barbecue
2. Check all the knobs are in the "OFF" position
3. Open the gas control valve at the gas cylinder
4. Operate the rear burner valve in combination with the electronic ignition push button on the side burner table
5. From the "OFF" position, push in then turn control knob anti-clockwise to the "HI" position

6. Keep the knob pushed-in at the "HI" position for 4 seconds whilst pressing the electronic ignition push button
7. Repeat the steps from beginning, 3-4 times until the burner is lit
8. Once the rear burner has ignited keep the knob pushed-in at the "HI" position until the rear burner ceramic glows red
9. Repeat the steps from beginning, 3-4 times until the burner is lit
10. If the burner fails to light, turn off and wait for 5 minutes, then repeat the steps from beginning
11. Turn the knob anticlockwise to adjust the heat from High – medium – Low to your heat requirement.

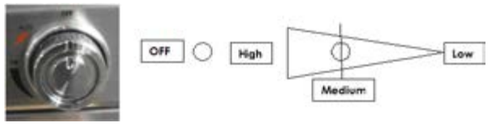

IMPORTANT!

Keep a spray bottle of soapy water near the gas supply valve and check the connections before each use.

WARNING!

1. Do not light the grill if odour of gas is present.
2. It is important to ensure that all control valves, including the gas cylinder, are turned off after use.

NOTE:

When using the rear burner and rotisserie use 1 or 2 of the main burners at the low heat setting if a little extra heat is required.

WARNING!

Do not use the rear burner in combination with main burners on high heat setting when the hood is closed.

WARNING!

Caution/Danger: Extreme care is required when cooking with hood in closed position. Frequent checks must be undertaken for the heat and temperature to ensure safe cooking.

Too much heat can cause fire.

TURNING OFF A BURNER
Push in then turn each burner control knob clockwise to the "OFF" position.

TURNING OFF YOUR BARBECUE
When you have finished using your barbecue, turn off the gas at the bottle. Push in and then turn all the control valves fully clockwise to the "OFF" position. Wait until the barbecue is sufficiently cool before replacing the barbecue lid or closing its hood. Once cooled, a protective cover should always be fitted to the barbecue to protect your investment from the ailments when not in use.

TIMER
The BBQ TIMER is located on the Side Table. The TIMER will give an audible sound when a pre-set time is activated.

The Timer is purely a mechanical device worked by an internal coil spring. The coil spring works both the timer and the ringer and requires adequate winding up to work correctly. If setting for a period of less than sixty minutes the timer should first be wound clockwise half a turn to the sixty minute graduation, then back to the desired time.

The timer has a maximum setting of 120 minutes with graduation markings at 5 minutes intervals. The timer is purely a time indicator and should not be used for accurate time measurement. DO NOT leave the BBQ unattended when cooking, plus frequently check the
items being cooked.

The below actions will damage the internal workings of the TIMER beyond repair.
DO NOT force the timer knob clockwise more than one full turn and **DO NOT** force the timer knob anti-clockwise past the 120 minute "top" graduation mark as this will damage the timer.

WARMING RACK
Warming racks are a convenient way to keep cooked food warm or to warm items such as bread rolls. Always check that your warming rack is properly fitted before use.

GRILL COOKING
The burners heat up the flame tamers underneath the grill, which in turn heats the food on the grill. The natural juices produced during cooking fall onto the flame tamers below and vaporise. The subsequent rising smoke bastes the food, as it travels upwards, imparting that unique barbecue flavour.

FLAT PLATE / FLAT-RIBBED PLATE / DEEP DISH (WHERE SUPPLIED)
The burners heat the griddle plate directly, which then cooks the food on contact. These allow for the cooking of smaller items, such as seafood, which could fall through the spaces of a grill. They are also suitable for cooking items that require high-temperature/short-duration cooking, such as vegetables and smaller cuts of fish. Similarly, these can be used in exactly the same way as a griddle in the kitchen, for searing steaks, cooking eggs, etc.

DO NOT use both the plate and deep dish at the same time. This will cause your BBQ to overheat and could cause a fire.

COOKING AND USE OF HOOD
Barbecues equipped with a roasting hood give the option of cooking with hood closed to form an 'oven' for roasting food, such as joints of meat, whole chickens, etc.

Do not cook with the hood down at a high temperature for long periods of time.

WARNING!

Cooking with the hood closed and the burners on high creates a fire risk.

When the hood is closed, a large amount of heat is trapped inside the barbecue. Thus, it is **IMPORTANT** to make sure that all the burners are turned to the low position to prevent burning of the food and damaging the barbecue. Avoid lifting the hood unnecessarily as heat is lost every time the hood is opened. Use the temperature gauge to check the heat of the barbecue.

USB PORT

Some BBQ's have a USB Port installed, this is to allow for the use of smaller appliances and has limited capacity. It may not power appliances which require a high power draw.

WARNING!

DO NOT PUT YOUR USB port supported gadgets on **HOT BBQ SURFACES**

DO NOT ALLOW YOUR BARBECUE TO OVERHEAT. A BARBECUE SHOULD NEVER BE LEFT UNATTENDED WHILE COOKING!

For safety reasons, barbecue plates and grills will not cook as hot towards the front of the barbecue.

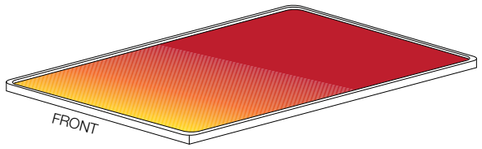

The slightly lower temperature at the front can easily be overcome by rotating the food being cooked around the barbecue plate or grill.

SMOKER DRAWER USAGE

The smoking of meat and other food is a personal taste and may take some experimenting to get this function working to your preference, however; these are some guides on the basic use of the smoker drawer.

- Pull smoker drawer out from dashboard and place flavoured sawdust when BBQ is cold.
- Heat BBQ up to normal cooking tempreture and at approx 140 - 150°C, the sawdust will start giving off smoke.
- Use the two burners next to the smoker drawer to heat the BBQ.
- Use flavoured sawdust as opposed to pellets.
- Place food inside BBQ and cook.

WARNING!

DO NOT attempt to add sawdust to smoker drawer when BBQ is hot.

Cooking at too high a tempreture can cause the sawdust to catch fire.

FLARE-UP CONTROL

Flare-ups occur when meat is barbecued, and its fats and juices fall upon the flame tamers. The smoke from some flare-up helps give cooked meat its barbecued flavour, but excessive flare-up will result in meat being burned. To control flare-up, it is advisable to trim away excess fat from meat and poultry before grilling.

Also, the burners should always be placed on the low setting during cooking. Finally, extinguish flare-ups by applying baking soda or salt directly onto the flame tamers. Always protect your hands when handling anything near the cooking surface of the barbecue.

If a fat fire should occur in the drip tray, turn all knobs to the off position, turn off the gas at the bottle, and wait for the fire to go out. Do not pull out the drip tray or douse with water.

COOKING USING OPTIONAL ACCESSORIES
ROTISSERIE COOKING (OPTIONAL)

1. Carefully remove the cast iron cooking surfaces and the warming rack from the barbecue.
2. Place the flame tamers to the centre of the barbecue body. It is over this area that the meat will be cooked.
3. Slide one of the spit forks onto the spit rod and tighten its thumb screw to secure it into place. Insert the pointed end of the spit rod into the meat being cooked and slide the meat towards the centre of the rod. Make sure the fork is fully into the meat. Slide the other fork onto the rod, into the meat, and tighten the thumb screw once in place. For optimal rotisserie cooking, food must be placed securely onto the middle of the spit rod and balanced so that the rotisserie can rotate freely without interference from any barbecue surfaces. Any loose sections of meat should be secured so they do not hang down and interfere with the rotation of the spit rod.
4. Insert the pointed end of the spit rod into the motor. Lay the other end of the spit rod onto the opposite bracket.
5. Light the barbecue.
6. Turn on the rotisserie motor to begin rotisserie cooking. The hood has been designed so that it may be closed during rotisserie cooking.
7. Always cook foods on the lowest flame setting to avoid burning or overcooking.
8. DO NOT ALLOW YOUR BARBECUE TO OVERHEAT. A BARBECUE SHOULD NEVER BE LEFT UNATTENDED WHILE COOKING!
9. If cooking with rotisserie using indirect heat (not using burners directly under meat - oven style cooking), a baking dish (not supplied on some models) can be placed under the food to catch fats and drippings.
10. If your model of BBQ is fitted with the smoker drawer, use two smaller aluminium foil oven trays, (one on either side of the smoker drawer) to collect the dripping fat.

INFRARED REAR BURNER & ROTISSERIE (OPTIONAL)

Preparing your barbecue:

You will need to remove both grill plate and solid plate, also the flame tamers and warming rack. Place these in a safe place for later re-assembly. Place a baking dish (not supplied) onto the burners, the dish should be large and deep enough to capture the excess grease as it falls from the food.

Centrally secure the food with the rotisserie prongs, turning the rotisserie rod by hand to test for balance, adjust the food position if required. Insert pointed end of rod into the motor, test that everything is running correctly.

Using the Rear Burner for roasting on a barbecue can be different depending on our preferences. A suggestion might be to use 1-3 of the main burners to cook the roast and then use the Rear Burner towards the end of the cooking to "brown up" the roast. Using the Rear Burner by itself to do the cooking can take a long time depending on the size of the roast.

WARNING!

DO NOT use the rear burner in combination with main burners on high heat setting when the hood is closed.

WARNING!

Caution/Danger: Extreme care is required when cooking with hood in closed position. Frequent checks must be undertaken for the heat and temperature to ensure safe cooking.

Too much heat can cause fire.

EXTERNAL BBQ SMOKING FUNCTION,

Some BBQ's have a 25mm knock out fitted in to the Grill body, this gives the option to (using a screwdriver) twist this tab open to form a hole. One of the many smoker units available on the market can then be installed (the hole may need to be made larger for some installations).

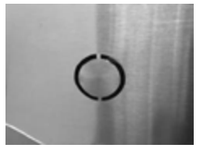

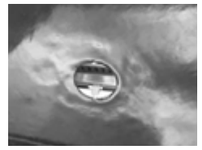

INTERCHANGEABLE COOKING SYSTEM (OPTIONAL)

Preparing your barbecue for pizza cooking:

Remove the round grill or plate insert.

Season the pizza stone with olive oil. Place the stone into a cold oven or cold BBQ and slowly raise the temperature to 180°C for 20 minutes.

NOTE:
Do not place a cold pizza stone into a hot nvironment. This could cause the stone to break due to uneven temperatures.

NOTE:
Do not wash the pizza stone with any cleaning agent. Brush any crumbs off the surface, do not gouge or cut into the surface during cleaning.

NOTE:
Do not remove the flame tamers from the BBQ. These should be positioned under the pizza stone.

NOTE:
Do not use the pizza stone as a cutting table.

NOTE:
When using the rear burner and rotisserie use 1 or 2 of the main burners at the low heat setting if a little extra heat is required.

NOTE:
When using the rear burner and rotisserie use 1 or 2 of the main burners at the low heat setting if a little extra heat is required.

NOTE:
When using the rear burner and rotisserie use 1 or 2 of the main burners at the low heat setting if a little extra heat is required.

NOTE:
When using the rear burner and rotisserie use 1 or 2 of the main burners at the low heat setting if a little extra heat is required.

NOTE:
When using the rear burner and rotisserie use 1 or 2 of the main burners at the low heat setting if a little extra heat is required.

NOTE:
Do pre-heat the BBQ to around 200°C - 245°C prior to cooking the pizza.

NOTE:
Do sprinkle a little flour or cornmeal to stop the pizza sticking to the stone.

NOTE:
Do keep fillings away from the pizza edge, food spills may spoil the pizza stone.

NOTE:
Do transfer your pizzas to the stone with a pizza paddle (not supplied). Remove the pizza from the stone to the table/ board for cutting.

NOTE:
Do lower the burners directly under the stone, this will allow the pizza to cook more evenly.

NOTE:
Do check after 10 minutes by raising the hood slightly, be aware of a possible heat rush coming from within as you lift the hood.

NOTE:
Do not remove the pizza stone from the BBQ with oven mitts directly after cooking. The pizza stone reaches a very high temperature, wait for the pizza stone to cool naturally.

NOTE:
Do lightly oil the pizza stone after each cooking session.

FOR BBQ'S WITH THE KEBAB COOKING OPTION
PREPARING YOUR BARBECUE FOR KEBAB COOKING (OPTIONAL)

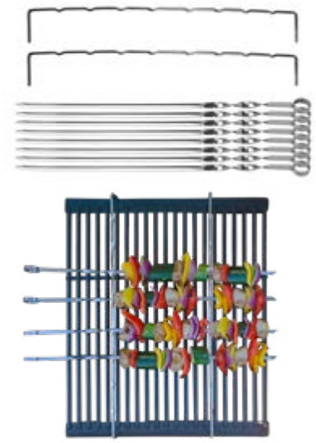

Insert the kebab racks into the holes provided in the grill plate.

NOTE:
Keep meat chunky to grip the kebab skewers.

NOTE:
Loosely pack the meat for even cooking, some foods will turn better if two skewers are used.

NOTE:
Wash hands frequently if arranging raw meats between cooking sessions.

TROUBLESHOOTING

BEFORE CALLING FOR SERVICE
If the grill does not function properly, use the following checklist before contacting your dealer for service.

APPLIANCE APPROVED OUTDOOR USE ONLY
USE ONLY THE 5/8" x 18 GAS CONNECTION HOSE AND REGULATOR PROVIDED!
If a replacement is necessary, please contact either our Masport Customer Service Department or your local dealer.
The use of unauthorised parts can create unsafe conditions and environment.
Refer to your Masport warranty card for warranty information.

STORAGE OF THE GRILL
1. Clean the BBQ.
2. Store the BBQ outdoors in a dry, well ventilated area and out of reach of children when LP tank is connected to the grill.
3. Store the BBQ indoors ONLY after the LP tank is turned off and removed, the LP tank must be stored outdoors, out of reach of children, NEVER store the tank in a building, garage or any other enclosed area.
4. If using a cover for your barbecue, check your BBQ every few weeks.

CHECKLIST

Problems	Possible Cause	Solutions
Burner won't light after pushing and turning the knobs	Electrode deposited with cooking residue	Use clean swab and alcohol to clean
	Electrode damaged	Replace
	Electrode wires are loose or discounted	Reconnect or replace with new Electrode assembly with wires
	Orifice blocked	Check the orifice for blockage
	Wire is shorting	Ensure connections are tight Replace with new Electrode assembly with wires
Burner can't light by match	No gas	Open the LP tank valve
	Gas flow is not smooth	Clear burner tubes
	Incorrect assembly between burner and valve	Re-assemble
Yellow or orange flames, with gas odour	Incomplete combustion	1. Check the burner inlet for obstruction such as spiders 2. Check air shutter for correct adjustment 3. Check for the source
Low heat with knob in "high" position	Gas hose bent or kinked	Straighten
	Burner or orifice blocked	Clear
	Low gas pressure	Check Cylinder/ Regulator (refer to pg. 15)
	Grill not preheated	Preheat the grill for 15 minutes
Flare up	Excessive meat fat	Cut off fat before grilling
	Over high temperature	Adjust
	Grease deposit	Clean
Flame out	Over high winds	Find a less windy place
Flame lifting	Over high gas pressure	Call the gas dealer
Flashback	Burner port blocked	Clean
Grease fire	Grease accumulated in food	Turn off knobs, LP tank valve, leave lid open, let fire burn out. Clean the grill when cool.

PARTS LIST

For illustration purposes only, some Parts are slightly different shape depending on the model of BBQ.

1. Base tray × 1pc	2. Front skirt x 1pc	3. Left skirt x 1pc	4. Right skirt x 1pc
5. Castor × 4pcs	6. Left panel × 1pc	7. Right panel x 1pc	8. Back panel × 1pc
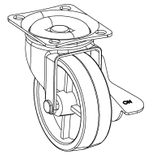			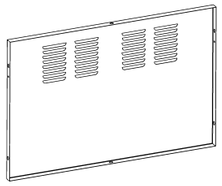
9. Transom × 1pc	10. Left door x 1pc	11. Right door x 1pc	12. Handle bracket × 4pcs
13. Door handle × 2pcs	14. Hood and Body Assembly x 1pc	15. Knob x 6 or 8 pcs	16. Side shelf × 1pc (Timer Shown)
			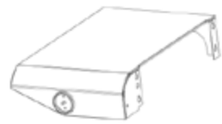
17. Side burner assembly × 1pc	18. Drip tray × 1pc	19. Grease cup × 1pc	20. Flame tamer
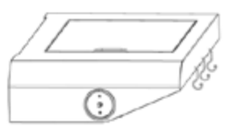		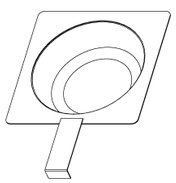	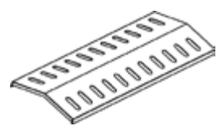

PARTS LIST (CONTINUED)

21. Cook grill × 3pc	22. Cook plate × 1pc	23. Warming rack × 1pc	24. Prong × 2pcs
			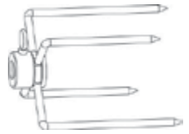
25. Rod-A × 1pc	26. Rod-B × 1pc	27. Guide × 1pc	28. Rotisserie Handle x 1pc
		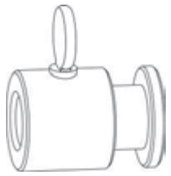	
29. Motor Holder × 1pc	30. Motor × 1pc	31. Battery × 2pcs	32. Counter weight × 1pc
33. Heat Shield	34. Knob - Rear burner (Rear burner only)	35. Deep Dish (Only if applicable)	36. Top Cabinet Panel x 1pc
		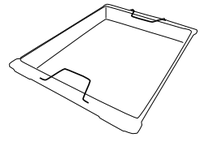	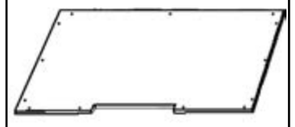
37. Drawer	38. Drawer inner panel	39. Drawer Handle	40. Drawer front panel
41. Slides	42. Drawer holder	43. Smoker drawer cover	44. Somker drawer
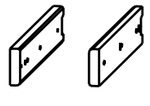	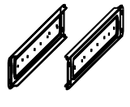	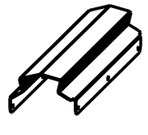	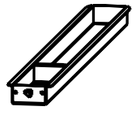

NOTE:

Items 24-31 are for barbecues fitted with a rotisserie

PARTS LIST (CONTINUED)

45. Left slide of smoker drawer	46. Right slide of smoker drawer	47. Wiring for the Grill body lights	48. Spark pin
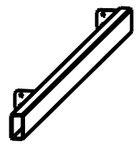	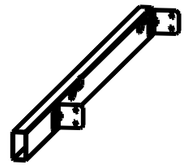	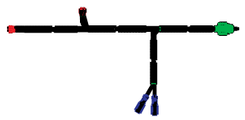	
49. USB port	50. Cooking timer	51. Trivet	52. Transformer
		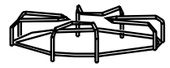	
53. Cast iron side burner			
a. Screw M6*12 43pcs	b. Screw (SS) M6*12 14pcs	c. Big fibre washer 6pcs	d. Screw M5*10 2pcs
 *(Screw (SS) M6*12 - 43pcs for Super Grande 210 & Super Grande RB 210 & Super Grande RB/W BBQs)*	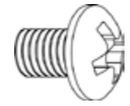		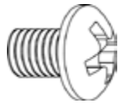
f. Nut M6 4pcs	g. Screw (Black) M6*40 2pcs	h. Washer 2pcs	

FASTENER KITS

Only one Fastener Kit is supplied per barbecue. The kit type depends upon the model of barbecue.

This Owner's manual is used for various 210 series barbecue models. The parts illustrated in this manual may have slight variations to the items supplied with any one specific model.

OPTIONAL EXTRAS

547137 Interchangeable Cooking System Includes the following items: 559231 - Kebab Rack (each) x2 547136 - Grill (390 x 485) x1 559761 - Kebab Skewers x8 559762 - Pizza Stone x1 547134 - Grill-Insert, Round x1 547135 - Plate-Insert, Round x1 547223 - Handle-Grill Insert x1	
559765 Grill - Matt P/E 390 x 485 with kebab option **547139 Grill - Gloss P/E 390 x 485 with kebab option**	
555231 Kebab Rack (each)	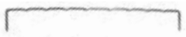
559761 Kebab Skewer (each)	
559218 Rotisserie Set 210 Includes the following items: 556297 - Prongs x2 559223 - Rod-550 x1 559224 - Rod-400 (Handle End) x1 559239 - Motor x1 559494 - Bracket / Fasteners x1 559497 - Alignment Collar x1 559769 - Handle x1	
559520 Grill Gloss P/E 390 x 485 **559219 Grill C/I 390 x 485** **559640 Grill Matt P/E 390 x 485** **547141 Grill Gloss P/E FADS 130 x 485**	
559521 Plate Gloss P/E 390 x 485 **559220 Plate C/I 390 x 485** **559641 Plate Matt P/E 390 x 485** **547140 Plate Gloss P/E FADS 395 x 485**	
559672 Deep Dish P/C 385 x 480	

CARE AND MAINTENANCE

Regularly clean your barbecue between uses and especially after extended periods of storage. Ensure the barbecue and its components are sufficiently cool before cleaning. Do not leave the barbecue exposed to outside weather conditions or stored in damp, moist areas.

- Never douse the barbecue with water when its surfaces are hot.
- Never handle hot parts with unprotected hands.

Whilst our products are made to the highest standards and all care is taken to make them as weather proof as possible, we cannot accept responsibility for rust occurring on exposed metal parts unless this is a result of faulty manufacture of parts.

In order to extend the life and maintain the condition of your barbecue, we strongly recommend that the unit is covered when not in use, especially during the winter months.

STAINLESS STEEL CARE AND CLEANING ADVICE
Cleanliness and stainless steel are closely related. Stainless steel performs best when clean - cleanliness is essential for maximum resistance to corrosion and to maintain the good looks and life of your BBQ.

TYPES OF SURFACE CONTAMINANTS
Fingerprints and Stains

Fingerprints and mild stains resulting from normal use are the most common surface contaminates. They can be removed with a glass cleaner or with a soft rag. This should be followed by a thorough warm water rinse.

Dirt

Like any surface that is exposed to the environment especially in coastal areas, stainless steel can get dirty. Cleaning with warm water with or without a gentle detergent is sufficient. Next in order are mild non-scratching abrasive powders such as typical household cleaners.

These can be used with warm water, nylon bristle brushes, sponges, or clean cloths. Carbon steel brushes or steel wool should be avoided as they may leave particles embedded on the surface which can lead to RUSTING. Cleaning should always be followed by rinsing in clean hot water.

Grease

Grease may soil stainless steel surfaces in food preparation. These soils may be mildly corrosive if left or may not allow the surface to maintain passivity, and so regular removal is a necessity for the appearance.

TYPES OF CLEANERS AND METHODS
Consider the possibility of scratching and the potential for post-cleaning corrosion caused by incompletely removed cleaners. Avoid using abrasive cleaners unless absolutely necessary.

CLEAN WATER AND WIPE
A soft cloth and clean warm water should always be the first choice for mild stains and loose dirt and soils. A final rinse with clean water and a dry wipe will complete the process and eliminate the possibility of water stains.

HOUSEHOLD CLEANERS
Household cleaners fall into two categories: detergent (non-abrasive) and abrasive cleaners. Abrasive cleaners are more effective but introduce the possibility of scratching the surface. A neutral cleaner low in chloride is essential. The cleaning method generally employed with these cleaners is to apply them to the stainless surface and follow by cloth wiping in the direction of the grain or polish lines (not across them). The cleaned surface should be thoroughly rinsed with clean water and wiped dry with a soft cloth if water streaking is a consideration.

CARE OF STAINLESS STEEL IN YOUR BBQ
Your BBQ features Stainless Steel components. All Stainless Steel grades require a level of care and protection to retain their appearance. Stainless Steels are not immune to corrosion and neither are they maintenance-free, contrary to popular public perception. Even the highest marine grades of Stainless Steel require frequent cleaning to avoid oxidation and other corrosive issues.

Modern tastes dictate that your BBQ features Stainless Steel with a brushed finish. This brushed finish is attained by running Stainless Steel sheets through an abrasive process that removes the mirror finish and leaves the brushed finish. Brushed-finish Stainless Steel requires frequent cleaning and care, to maintain its quality of appearance. Without adequate care it is realistic to expect that it will show signs of corrosion in time.

Stainless steel is definitely not a maintenance-free material. Cleanliness and Stainless Steel are closely related.

The cleaner stainless steel can be kept while in storage or during use, the greater the assurance of optimum corrosion resistance. In order to maintain the good looks and life of your BBQ, follow these summary tips on the care of stainless steel:

- When new or when cleaned and dried, we recommend the owner apply a thin coat of Olive Oil to stainless steel surfaces which should then be polished in. The Olive Oil will help greatly in protecting the stainless steel from corrosive contaminants and assisting removal of finger prints and other marks, keeping the appearance of the stainless steel in new condition. The Olive Oil coating also makes further polishing easier.
- Use clean, soft cloths or sponges to clean your grill.
- Carbon steel brushes or steel wool should never be used.
- Do routine cleaning of exposed surfaces.
- After cleaning, rinse thoroughly with water.
- Cleaning with chloride-containing detergents must be avoided.
- On polished finishes, rubbing or wiping should be done in the direction of the polish lines, NOT across them.
- Care must be taken when cleaning the fascia. Printed information may be erased with heavy cleaning.

CAST IRON COOKING SURFACES
Before cooking with the grill, flat plate or deep dish (if supplied with your BBQ) clean these with hot soapy water to remove any oil or residue from the packaging or manufacturing process. Wash with clean water and let the plates dry naturally. Prior to lighting your BBQ place them back into the BBQ. Then after lighting your BBQ, let the plates warm up slowly over a period of 30 minutes, during this time increasing the heat.

You will notice slight vapors rise from the plates, this is natural as residues are burned off. Turn off your BBQ to allow the plate to cool slightly. The plates can now be prepared with the addition of cooking oil. Take care that the plates are not at a temperature where adding the oil will cause a hazard. Brush the oil over the plate, allowing the oil to be absorbed into the surface. Allow the plate to fully cool, then remove any excess oil. the BBQ is now ready. Repeat the above to keep the plate and grill in a ready condition after each BBQ session.

PORCELAIN ENAMEL COOKING SURFACES
Porcelain Enamel surfaced items should be treated with care and should not be cleaned with an abrasive cleaner or scratchy cleaning item. Surfaces will crack or chip if hit or dropped. Porcelain Enamel surfaces should NOT be regarded as 'Non-stick', use of cooking oil is required as normal. Food will likely stick to an overheated or un-oiled enamel surface. The surface will be more easily cleaned by first soaking overnight.

BURNER MAINTENANCE
Provided that they are operating correctly, in normal usage, burning off the residue after cooking will keep the burners clean. The burners should be removed and cleaned annually, or whenever heavy build-up is found, to ensure that there are no signs of blockage (debris, insects) in either the burner portholes, the primary air inlet, or the neck of the stainless steel burners. Use a pipe cleaner to clear obstructions.

When refitting the burners, be careful to check they are positioned as follows. The neck of the burner fits over the valve outlet, the top flaps of the gas collector boxes fit over the top surfaces of the burners.

BURNER MAINTENANCE AND REPLACEMENT
Both the stainless steel burners and flame tamers do have a defined operating lifespan, these products are often exposed to cooking marinades and extreme heat in an area of the barbecue which can be neglected during regular cleaning.

Replacement parts are available from your local barbecue dealer.

SPIDER AND INSECT WARNING!
Spiders and insects can nest in the burners of the grill and cause the gas to flow from the front of the burner. This is a very dangerous condition, which can cause a fire to occur, thereby damaging the grill and making it unsafe to operate.

WHEN TO LOOK FOR SPIDERS
You should inspect the burners at least once a year or immediately after any of the following conditions occur:

4. The smell of gas in conjunction with the burner flames appearing yellow.
5. The BBQ does not reach temperature.
6. The BBQ heats unevenly.
7. The burners make popping noises.

PRIMARY AIR INLET WIDTH REQUIREMENT:
For 4 burner barbecues:

Width for each side: 5.5~6.5mm
Total width for twos ides: 11~13mm

For 6 burner barbecues:

Width for each side: 2~2.5mm
Total width for two sides: 4~5mm

HOW TO ADJUST:
For example: change the tube burner from 4B to 6B, need too adjust the primary air inlet width according to the pictures below.

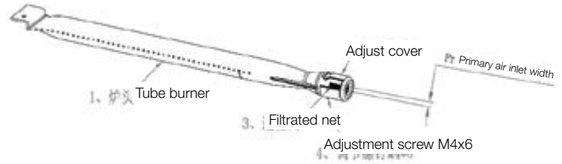

759345 Burner - 2 pack 210 Series.
759569 Flame Tamers - 2 pack 210 Series.

ELECTRODE SETTING

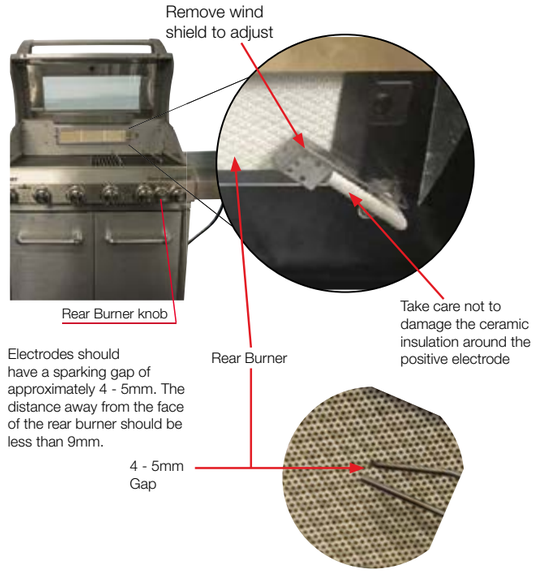

NOTE:
Cooking with the rear burner allows the food to "self baste" as it is turned, any excess juices will fall into the baking dish.

Your BBQ is safe to use with the hood closed however the internal temperature must be checked. Cooking with the rear burner is designed to be a slow cooking process, this allows the food to be succulent. External temperatures and breeze will effect the internal temperature, as a guide this should be around 165°C to 180°C.

NOTE:
Vegetables and herbs can be placed into the baking dish, these items will cook/flavour the food at the same time.

NOTE:
When using the rear burner and rotisserie use 1 or 2 of the main burners at the low heat setting if a little extra heat is required.

WARNING!

DO NOT use the rear burner in combination with main burners on high heat setting when the hood is closed.

WARNING!

Caution/Danger: Extreme care is required when cooking with hood in closed position. Frequent checks must be undertaken for the heat and temperature to ensure safe cooking.

Too much heat can cause fire.

DRIP TRAY
After every use, check the drip tray, drip pan, and foil pan for fat build-up. Failure to maintain these areas could result in a fat fire or excessive flare up. This can severely damage your barbecue and is not covered by the warranty.

BARBECUE BODY

WARNING!

Not cleaning the barbecue can pose a fire risk!

Regularly remove excess grease or fat from the barbecue body with a soft plastic or wooden scraper. It is not necessary to remove all the grease from the body. If you need to clean fully, use hot soapy water and a cloth, or nylon-bristled brush only. Remove cooking surfaces and burners before full cleaning. Do not immerse the gas controls or manifold in water. Check burner operation after carefully refitting into body.

FIXINGS
All screws and bolts, etc. should be checked and tightened on a regular basis.

END OF THE COOKING SESSION
After each cooking session, turn the BBQ burners to the “HIGH” position and burn off for 5 minutes. This procedure will burn off food residue, thus making cleaning easier.

STORAGE
Store your barbecue in a cool dry place. Cover the burners with aluminium foil in order to prevent insects or other debris from collecting in burner holes. A protective cover should always be fitted to the barbecue to protect your investment from the elements when not in use. If the barbecue is to be stored indoors, the gas bottle must be disconnected and left outside. The gas bottle should always be stored outside, in a dry, well-ventilated area, away from any sources of heat or ignition. Do not let children tamper with the bottle.

To protect your investment it is recommended that BBQs are protected by a suitable BBQ cover. But please note that prior to using a protective cover, the BBQ should always be cool, cleaned of any surface contaminant or dirt and be thoroughly dry. Failure to follow this information can lead to a BBQ cover being a corrosion breeder rather than a protective tool.

NOTE:
If leaving your BBQ covered for long periods, occasionally check for corrosion and insect habitation. Oil surfaces for extra protection.

SERIAL NUMBER
The serial number of your barbecue is located on the inside of the cabinet either on the right hand door or the side panel. If you do require any further assistance with your barbecue from your local dealer or Masport, please have this serial number handy as it will quickly allow us to identify the barbecue.

APPLIANCE DETAILS

	Width	Depth	Height
BBQ	1600mm	600mm	1250mm
Cooking Area	800mm	480mm	

TECHNICAL DATA

Name	Model	IAPMO Approval		Injector (mm)		Pressure (kPa)	Inp/Burn (MJ/h)	Total (MJ/h)
BBQ MASP SUPER GRANDE	BG6286BS-WS-RB	GMK10178	ULPG:	BBQ S/B R/B	0.92 0.92 0.98	2.75	6 x 11.70 1 x 10.99 1 x 12.70	93.89
			NG:	BBQ S/B R/B	1.38 1.62 1.68	1.00	6 x 9.60 1 x 12.80 1 x 12.70	83.10
BBQ MASP EQUIP	BG6286BS-WS-RB	GMK10178	ULPG:	BBQ S/B R/B	0.92 0.92 0.98	2.75	6 x 11.70 1 x 10.99 1 x 12.70	93.89
			NG:	BBQ S/B R/B	1.38 1.62 1.68	1.00	6 x 9.60 1 x 12.80 1 x 12.70	83.10
BBQ MASP MIGHTY	BG6286BE-WS	GMK10178	ULPG:	BBQ S/B	0.92 0.92	2.75	6 x 11.70 1 x 10.99	81.19
			NG:	BBQ S/B	1.38 1.62	1.00	6 x 9.60 1 x 12.80	70.40

Gas Supply Pressure, ULPG
Min: 2.70kPa; Max: 3.45kPA

Gas Supply Pressure, NG: 1.13 Kpa

Gas Type: NZ: Universal LPG or NG
AUS: ULPG or NG

Complies to:
Standard AS/NZS 5263.1.7

Minimum Clearance :
From Top of BBQ: 1000mm, From Sides: 430mm, From Rear : 430mm

Distributed by
MASPORT LIMITED

MASPORT LIMITED
320 Ti Rakau Drive, East Tamaki,
Auckland 2013, New Zealand

MASPORT AUSTRALIA PTY LIMITED
27 Commercial Drive, Dandenong
South, Victoria 3175, Australia

Read the instructions before using the appliance

USE OUTDOOR ONLY

WARNING: Parts of this appliance may be very hot, keep young children away

DO NOT REMOVE
AUSTRALIA AND NEW ZEALAND GAS SAFETY CERTIFICATION

IAPMO-R&T
OCEANA ™
GasMark

Manufactured by:
CHANT GROUP

548946.C.0

For storage and cylinder exchange, disconnect hose at the cylinder only, do not disconnect hose from the appliance.

Name	Model	IAPMO Approval		Injector (mm)		Pressure (kPa)	Inp/Burn (MJ/h)	Total (MJ/h)
BBQ MASP COMMANDER	BG6286BS-WS-RB	GMK10178	ULPG:	BBQ S/B R/B	0.92 0.92 0.98	2.75	6 x 11.70 1 x 10.99 1 x 12.70	93.89
			NG:	BBQ S/B R/B	1.38 1.62 1.68	1.00	6 x 9.60 1 x 12.80 1 x 12.70	83.10
BBQ MASP GRAPHITE RBW	BG6284BS-WS-RRB	GMK10178	ULPG:	BBQ S/B R/B	1.10 0.92 0.98	2.75	4 x 17.50 1 x 10.99 1 x 12.70	93.69
			NG:	BBQ S/B R/B	1.60 1.62 1.68	1.00	4 x 13.00 1 x 12.80 1 x 12.70	77.50
BBQ MASP SUPREME RBW / SUPREME PLUS RBW	BG6286BS-WS-RB	GMK10178	ULPG:	BBQ S/B R/B	0.92 0.92 0.98	2.75	6 x 11.70 1 x 10.99 1 x 12.70	93.89
			NG:	BBQ S/B R/B	1.38 1.62 1.68	1.00	6 x 9.60 1 x 12.80 1 x 12.70	83.10
BBQ MASP SUPREME W 210	BG6286BS-WS	GMK10178	ULPG:	BBQ S/B	0.92 0.92	2.75	6 x 11.70 1 x 10.99	81.19
			NG:	BBQ S/B	1.38 1.62	1.00	6 x 9.60 1 x 12.80	70.4
BBQ MASP ELITE W210	BG6284BS-WS	GMK10178	ULPG:	BBQ S/B	1.10 0.92	2.75	4 x 17.50 1 x 10.99	80.99
			NG:	BBQ S/B	1.60 1.62	1.00	4 x 13.00 1 x 12.80	64.80

Gas Supply Pressure, ULPG
Min: 2.70kPa; Max: 3.45kPa
Gas Type: NZ: Universal LPG or NG
AUS: ULPG or NG

Gas Supply Pressure, NG: 1.13 kPa

Complies to:
Standard AS/NZS 5263.1.7

Minimum Clearance :
From Top of BBQ: 1000mm, From Sides: 430mm, From Rear : 430mm

Distributed by
MASPORT LIMITED

MASPORT LIMITED
320 Ti Rakau Drive, East Tamaki, Auckland 2013, New Zealand

MASPORT AUSTRALIA PTY LIMITED
27 Commercial Drive, Dandenong South, Victoria 3175, Australia

Read the instructions before using the appliance

USE OUTDOOR ONLY

WARNING: Parts of this appliance may be very hot, keep young children away

DO NOT REMOVE
AUSTRALIA AND NEW ZEALAND GAS SAFETY CERTIFICATION

IAPMO-R&T
OCEANA ™
GasMark

Manufactured by:
CHANT GROUP

549759.E.0

For storage and cylinder exchange, disconnect hose at the cylinder only, do not disconnect hose from the appliance.

Masport Limited
320 Ti Rakau Drive, East Tamaki,
Auckland 2013
New Zealand
P: 0800 627 767

Masport Australia Pty Limited
27 Commercial Drive, Dandenong South
Victoria 3175
Australia
P: 1300 366 225

Copyright© Masport Limited