Masport®

BARBECUE RANGE

DELUXE

Part Number		**552907**
Dimensions	**Width**	**1600 mm**
	Depth	**600 mm**
	Height	**1250 mm**

Market Introduced - Aug 2015

Pantone: 7628 C

Pantone: Black 7C

Issue B.0
ECN 11996
Dec 2015 PB
REF # 752907

Deluxe

Masport

Issue B.0
ECN 11996
Dec 2015 PB
REF # 752907

Pantone: 7628 C
Pantone: Black 7C

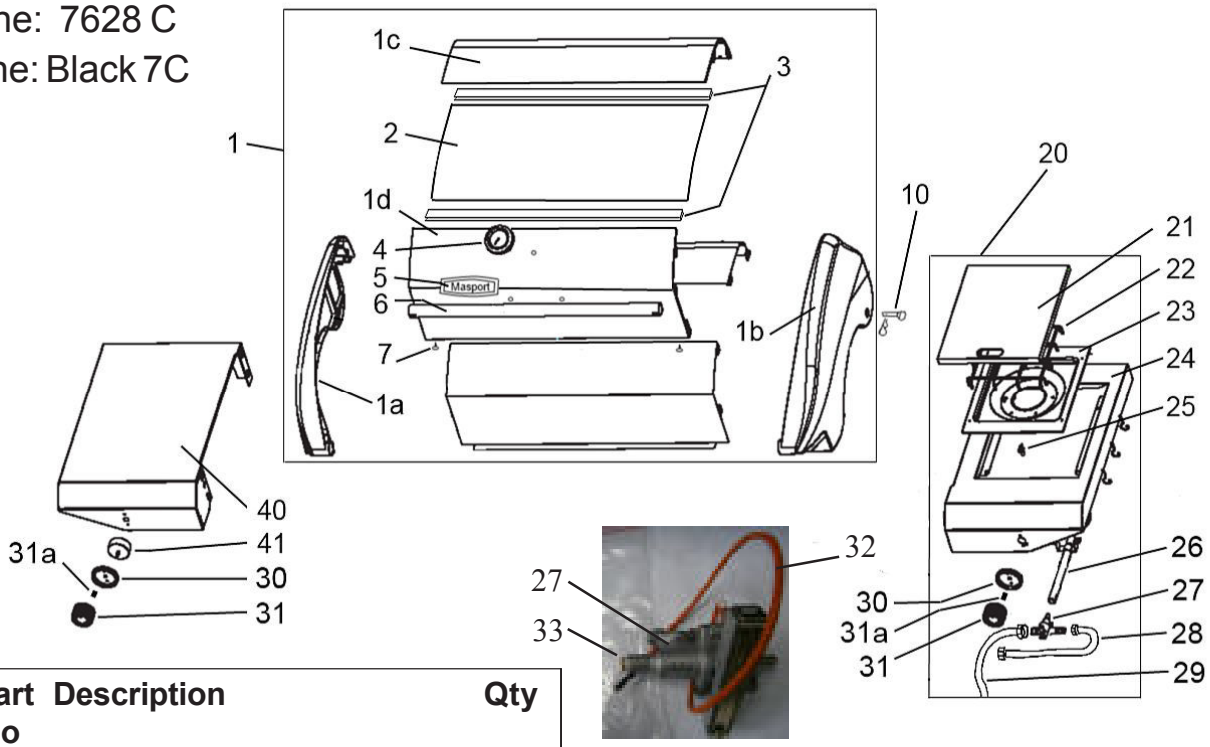

Item No	Part No	Description		Qty
1	547311	**Hood Assy-Wndow, PE RED**		1
1a	559941	*Panel- Side, Hood LH	D'Gra	1
1b	559942	*Panel- Side, Hood RH	D'Gra	1
1c	547557	*Panel- Outer, Rear	RED	1
1d	547556	*Panel- Outer, Front	RED	1
2	547155	*Glass- Window, Hood		1
3	547176	*Channel- Window, Hood		2
4	547619	*Temperature Gauge, 76dia	Blk	1
5	559229	*Badge- MASPORT		1
6	559371	*Handle- Hood		1
7	547664	*Rubber Stopper,	15dia x 6mm	2
10	559638	Pin- Hinge & "R" Clip		2
20	547623	**Table-Side,RH Assy**	**SS/GRA**	1
21	559238	*Lid- S/B, 280x346	SS	1
22	559236	*Grill- Side Burner		1
23	559360	*Insert- Side Burner		1
24	547158	*Table- Side, RH (S/B)	D/Gra	1
25	559290	*Electrode- Ignition, S/B		1
26	559237	*Burner-Side		1
27	559235	*Valve-Side Burner LPG,(seal 559779)		1
28	559791	*Hose-Side Burner, 500mm		1
29	559332	*Regulator & Hose (POL)		1
30	559339	*Bezel- Control Knob		1
31	559340	***Knob-Control,S/Grip**	**Chrome**	1
31a	559778	**Insert- Knob, 6.3mm Stem		1
32	547099	*Wire- Ignition, Side Burner		1

Item No	Part No	Description		Qty
33	547115	*Jet- Side Burner 0.92		1
40	547203	Table- Grey, LH (Timer)		1
41	559342	Timer		1
30	559339	Bezel- Control Knob		1
31	559340	**Knob-Control,S/Grip**	**Chrome**	1
31a	559778	*Insert- Knob, 6.3mm Stem		1

Not Illustrated

558782	BBQ Cookery Book	1
559495	Bolt Pack	1
559745	BBQ Cover- 210 Series	1
559802	Owner Manual	1

Spares Note

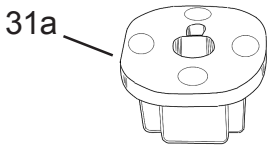

Insert 559778 can be used in knobs 559340 & 559341
Correct rotation is important prior to the assembly.

When ordering PLEASE QUOTE PART NUMBER & Description, NOT Illustration No.
Determine right or left hand side from standing in operating position (standing at handle)
Bold Text = Assemblies, Bulleted Text * = Items included in the Assemblies

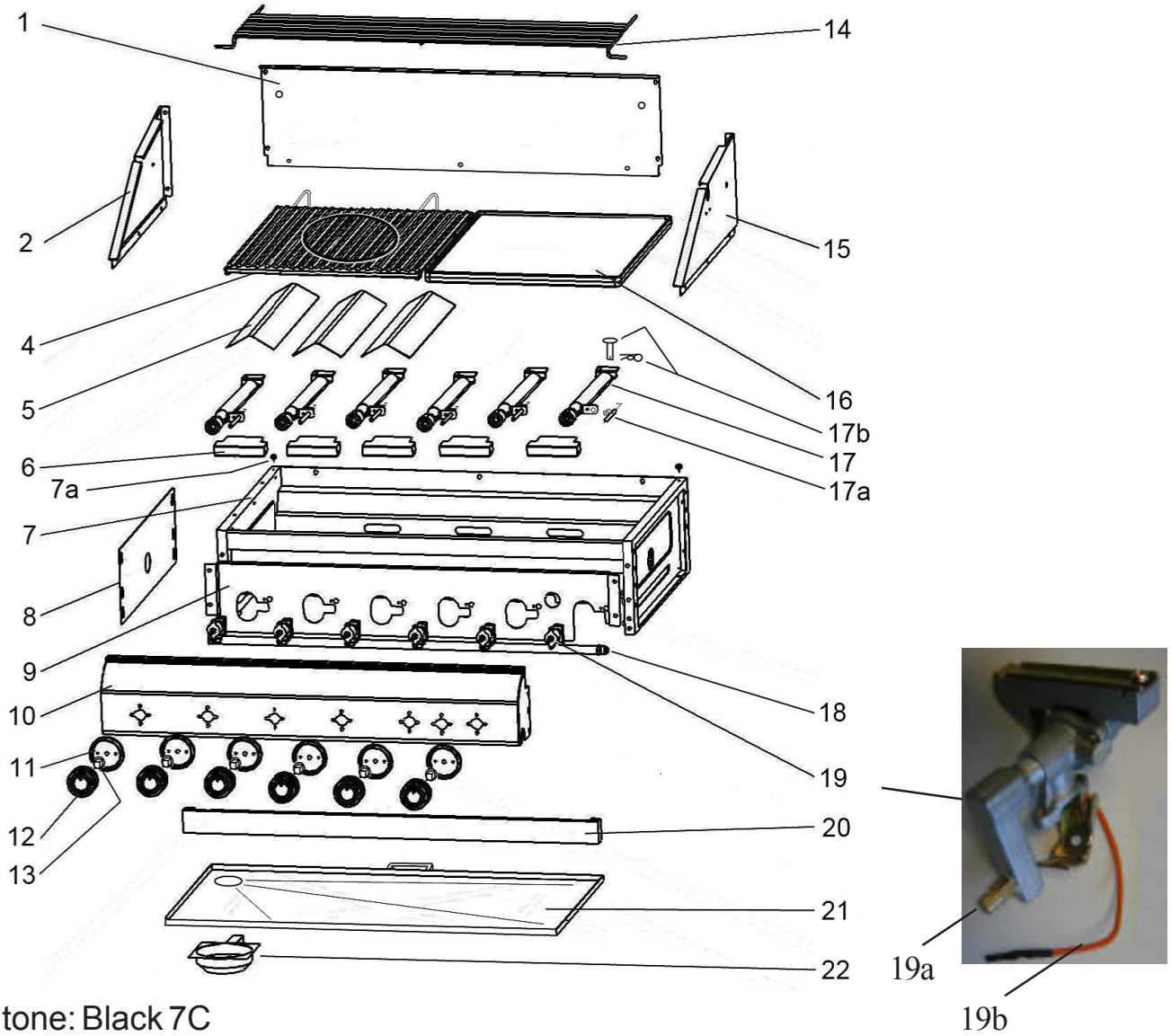

Pantone: Black 7C

Item No	Part No	Description	Qty
1	559362	Panel- Rear, Hood G/Body	1
2	559359	Panel- Side, LH Hood G/Body	1
4	547137	**Interchangeable Cooking System**	1
		(Refer to page 6 for contents)	
5	559346	Flame Tamer, 97 x 410	3
6	559583	Cross Light - 6 Burner	5
7	547143	Grill Body, FAD Frame Only 6B	1
7a	558826	Rubber Stopper- 9 dia x 3	2
8	559353	Panel- Heatshield, Side	1
9	559338	Panel- Heatshield, Front	1
10	547624	Dashboard BBQ Deluxe	1
11	559339	Bezel- Control Knob	6
12	559340	Knob- Control, S/Grip Chrome	6
13	559778	*Insert- Knob, 6.3mm Stem	1
14	559500	Rack- Warming	1

Item No	Part No	Description	Qty
15	559361	Panel- Side, RH Hood G/Body	1
16	547140	Plate- PE Gloss FAD 395x485	1
17	759345	Burner- Tube (two pack)	3
17a	559289	Electrode- Ignition, Main Burner	6
17b	559015	Pin & Clip (Burner)	6
18	547209	**Manifold- Assy(Integrated Ign)**	1
19	547208	*Valve- Main, LPG (seal 559779)	6
19a	559599	**Jet, 6B Main 0.90 (LPG)	1
19b	547098	Wire- Ignition, M/B 215mm	6
20	559939	Panel- Front, Grill D/GRA	1
21	547238	Tray- Drip, ZP FAD 796x435	1
22	559242	Cup- Grease, Entnr	1

When ordering PLEASE QUOTE PART NUMBER & Description, NOT Illustration No.
Determine right or left hand side from standing in operating position (standing at handle)
Bold Text = Assemblies, Bulleted Text * = Items included in the Assemblies

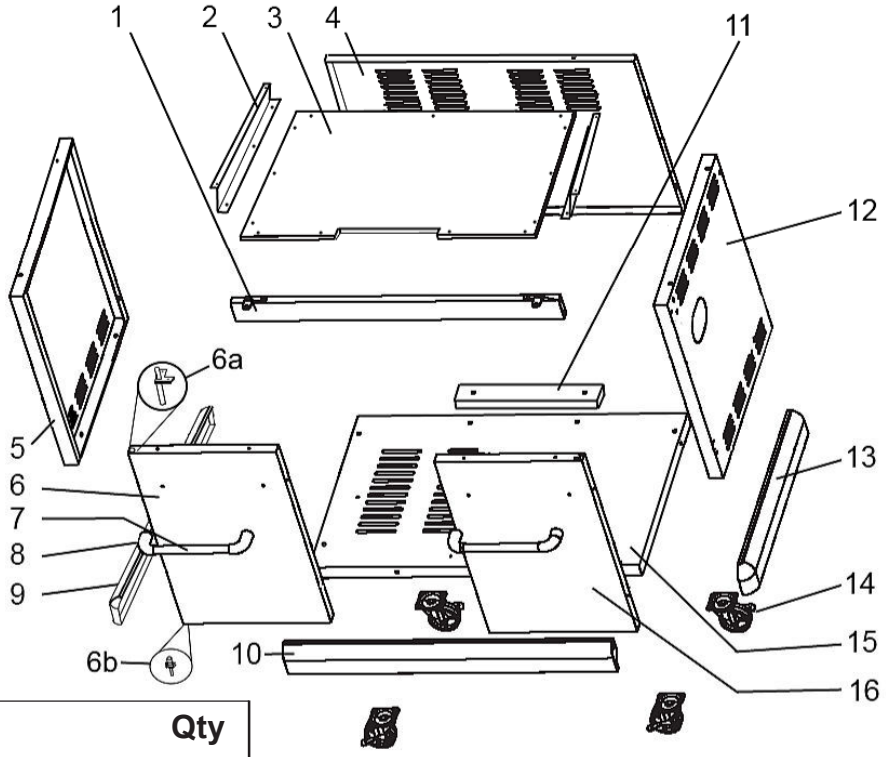

Pantone: 7628 C

Pantone: Black 7C

Item No	Part No	Description		Qty
1	559930	Panel- Top, Front	D/Gra	1
2	547316	Bracket- Top, Side Trolley	D/Gra	2
3	547315	Panel- Top, Trolley	D/Gra	1
4	559929	Panel- Back,	D/Gra	1
5	559932	Panel- Side, LH	D/Gra	1
6	547312	Door Assy LH-Inner(Red)Outer(Red)		1
6a	547130	*Hinge- Top, Door		1
6b	547131	*Hinge- Bottom, Door		1
7	559334	Handle- Door, Tube insert		2
8	559206	Bracket- Handle, Door		4

Item No	Part No	Description		Qty
9	559934	Apron- LH	D/Gra	1
10	559933	Apron- Front,	D/Gra	1
11	559571	Weight- Bottom Panel		1
12	559928	Panel- Side, RH	D/Gra	1
13	559935	Apron- RH,	D/Gra	1
14	559225	Castor- Locking, Plate Mount		4
15	559936	Panel- Bottom, Trolley	D/Gra	1
16	547313	Door Assy RH-Inner(Red)Outer(Red)		1

559218 Rotisserie Set 210 Series

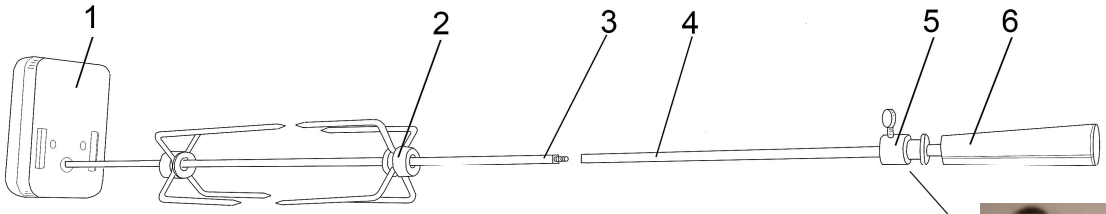

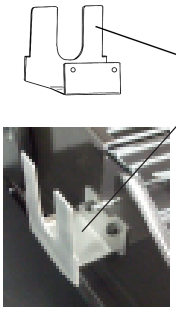

1	559239	Motor- Rotisserie	1
2	556297	Prongs	2
3	559223	Rod Only-Motor Side(550mm)	1
4	559224	Rod Only-Handle Side(400mm)	1
5	559497	Alignment Collar & Screw	1
6	559769	Handle (6mm thread)	1
7	559494	Bracket- Rotisserie	1

Data Plate 547627.a.0

Name	Model	IAPMO Approval		Injector (mm)	Pressure (kPa)	Inp/Burn (Mj/h)	Total (Mj/h)
SUPREME W 210	BG6286BE-WS	GMK10178	ULPG:	BBQ 0.90 S/B 0.92	2.75	6 x 11.70 1 x 10.99	81.19
DELUXE BL	BG6286BE-WS						
DELUXE RD	BG6286BE-WS		NG:	BBQ 1.38 S/B 1.60	1.00	6 x 9.60 1 x 12.80	70.40
DELUXE	BG6286BE-WS-R						
GRAPHITE DELUXE	BG6286BS-WS-RRB	GMK10178	ULPG:	BBQ 0.90 S/B 0.92 R/B 0.90	2.75	6 x 11.70 1 x 10.99 1 x 10.00	91.19
DELUXE LE	BG6286BS-WS-RRB						
GRANDE	BG6286BS-WS-RRB		NG:	BBQ 1.38 S/B 1.60 R/B 1.52	1.00	6 x 9.60 1 x 12.80 1 x 10.00	80.40

Gas Supply Pressure, ULPG
Min: 2.70kPa; Max: 3.45kPA

Gas Supply Pressure, NG: 1.13 KPa

Gas Type: NZ: Universal LPG or NG
AUS: ULPG or NG

Complies to:
Standard AS 4557-2004 (Amdt2)

Minimum Clearance :
From Top of BBQ: 1000mm, From Sides: 430mm, From Rear : 430mm

Distributed by
MASPORT LIMITED

MASPORT LIMITED
1-37 Mt Wellington Highway, Panmure, Auckland 1060, New Zealand
PO Box 14349, Panmure Auckland 1471, New Zealand

MASPORT AUSTRALIA PTY LIMITED
1/40 Abbotts Road, Dandenong South, Melbourne, Victoria 3175, Australia
PO Box 533, Braeside, Victoria 3195, Australia

Read the instructions before using the appliance

USE OUTDOOR ONLY

WARNING: Parts of this appliance may be very hot, keep young children away

AUSTRALIA AND NEW ZEALAND
GAS SAFETY CERTIFICATION

Manufactured by:
CHANT GROUP

547627.A.0

For storage and cylinder exchange, disconnect hose at the cylinder only, do not disconnect hose from the appliance.

Optional Extras

547137	**Interchangeable Cooking System P/E Gloss**	**1**
555231	*Kebab Rack (each)	**2**
547136	*Grill, P/E Gloss (390 x 485)	**1**
559761	*Kebab Skewers	**8**
559762	*Pizza Stone	**1**
547134	*Grill Insert, P/E Gloss	**1**
547135	*Plate Insert, P/E Gloss	**1**
547223	*Handle- Grill Insert, P/E Gloss	**1**

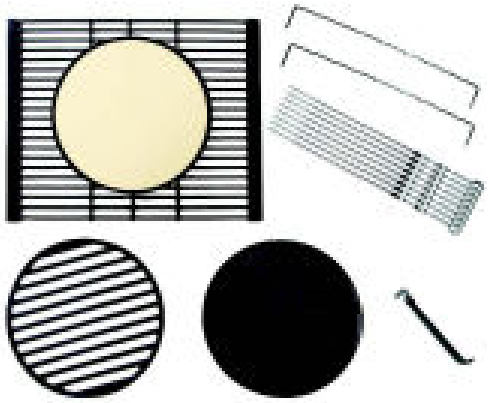

559761	Kebab Skewers (each)	**1**
555231	Kebab Rack (each)	**1**

Cooking Grills

559219	Grill- C/I Powder Coated Black 390 x 485	**1**
559640	Grill- C/I P/Enamel, Matt Black 390 x 485	**1**
559520	Grill- C/I P/Enamel GlossBlack 390 x 485	**1**
559765	Grill- C/I P/Enamel , Matt Black390 x 485 (K/Rack)	**1**

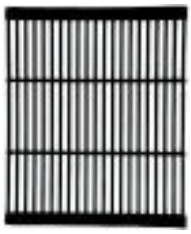

547217	Grill- C/I, FAD 130 x 485 (K/Rack) (3 Required)	**1**

Cooking Plates

559220	Plate- C/I Powder Coated Black 390 x 485	**1**
559641	Plate- C/I P/Enamel, Matt Black 390 x 485	**1**
559521	Plate- C/I P/Enamel GlossBlack 390 x 485	**1**

Deep Dish

559672	Deep Dish- C/I Black 385 x 480 x 60	**1**

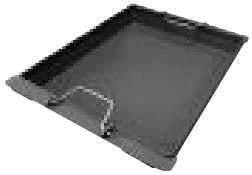

Optional Extras Con't

547053 KIT Conversion, Natural Gas - 210 6 Burner Series

547042	Valve- Main, NG 1.38 Integrated Ign	**6**
547045	Valve- Side, NG 1.60 Integrated Ign	**1**
547051	Hose & Regulator- NG	**1**

547042 Valve- Main, NG Integrated Ign

547045
Valve- Side, NG Integrated Ign

547051
Hose & Regulator- Natural Gas